SOMERSAULT

May 1996
Vol 19, No 3

SIGNALLING RECORD SOCIETY OF VICTORIA INC

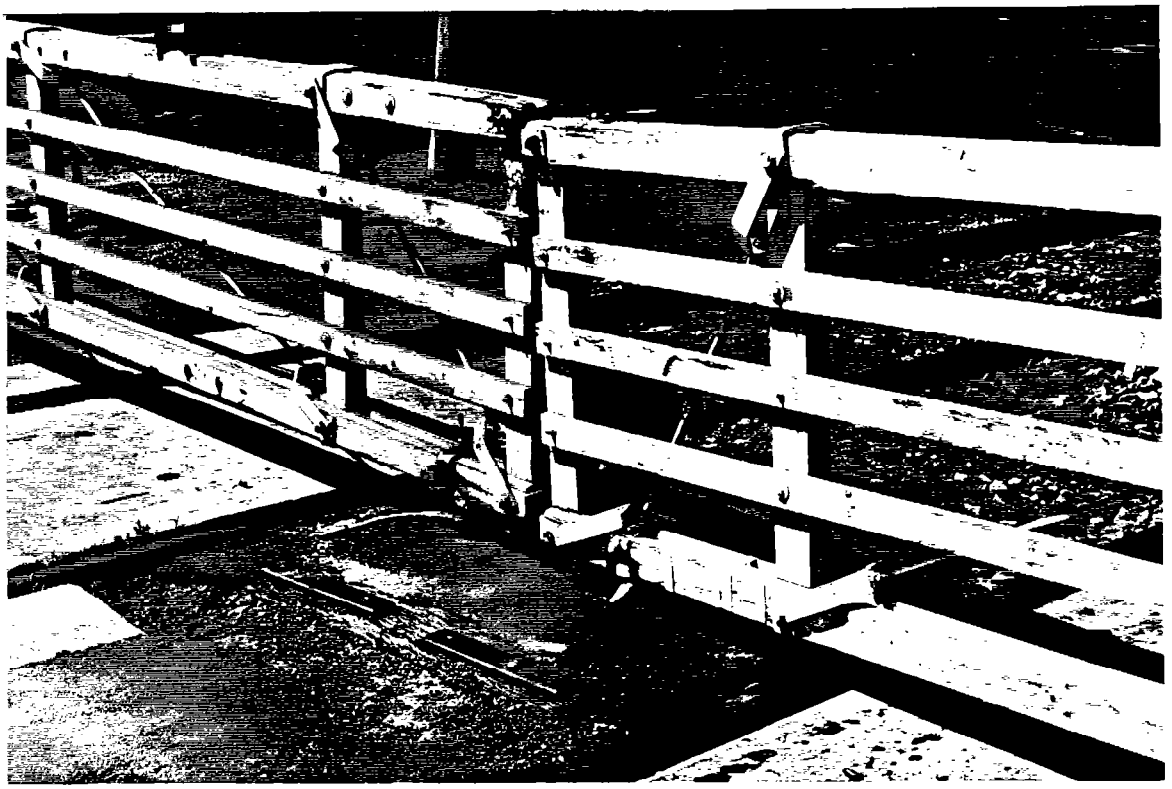

Details of the Hand Gates at Gisborne. The standard hand gates are built to a Way and Works design and were used for other locations than at level crossings, for example at the entrance to station yards. The design is much simpler than the complicated design used for interlocked gates. The basis of the gates are 4 4"x1.75" rails (two at the top and two at the bottom) on each side of 4"x3" vertical posts. Three 3"x1" rails prevent people and animals from climbing through the gate and are fitted to the road side of the gates only. Tension rods in each panel are provided to keep the gates square. A drawing of a 25 foot gate is shown on the rear cover of this issue. When used at level crossings, the gates are held in position across the road or rail line by pins loosely bolted to the bottom rails of the gate and operated by the boot of the gatekeeper. The front and back stops are fishplates bolted to a cut down piece of sleeper embedded in the road. The pins and back stop can been seen in the photo. Photo taken on 15 February 1996. Photo: Andrew Waugh

SOCIETY CONTACT INFORMATION:

EDITOR: Andrew Waugh, c/o CSIRO, 723 Swanston St, Carlton, 3053.
Phone (03) 9457 3795 (AH), (03) 9282 2615 (BH) Fax (03) 9282 2600

MANAGING EDITOR: David Langley, P.O. Box 8, Avenel, 3664,
Phone (057) 96 2337 (AH), (057) 92 3288 (BH)

PRESIDENT: Alan Jungwirth,
29 Clements St, East Bentleigh, 3165, Phone (03) 9563 7287 (AH)

SECRETARY and MEMBERSHIP OFFICER: Glenn Cumming,
19 Peace St, Glen Iris, 3146. Phone (03) 9885 8546 (AH), (03) 9623 3611 (BH),
Fax (03) 9623 2911, urgent messages only please.

NSW GROUP LEADER: Neil Curryer,
20 Cooksey Close, Waratah West, 2298, Phone: (049) 67 6960

NSW GROUP SECRETARY: Bob Taaffe,
12 Western Crescent, Westleigh, 2120, Phone: (02) 481 9994.

SIGNALLING ALTERATIONS

The following alterations were published in WN 6/96 to WN 12/96. The alterations have been edited to conserve space. Dates in parenthesis are the dates of the Weekly Notice.

08.02.1996 **Donald**

SW 40/96 was cancelled and replaced by a new Circular. The new Circular is identical except that

1. Donald is now attended only as an Intermediate Terminal Station, and not as a Crossing Station.
2. The DICE code will be displayed on the DICE Approach Zone and DICE Subsidiary Boards, and will *not* be displayed on the Train Order.
3. Possession of a Train Order to proceed in the Down direction implicitly gives the Driver permission to enter the DICE code for Signal E.

Amend the Book of Rules. (SW 53/96, WN 7/96)

11.02.1996 **Keon Park - Epping**

From Sunday, 11.2.96, authority has been granted for Caution Orders to be issued via post telephones between Keon Park and Epping (including the station area at Epping). Automatic and Track Control is in force between Keon Park and Epping and the Signaller, Epping, will carry out the duties specified for the Train Controller in so far as they apply.

When the local control panels at Lalor and Keon Park are switched out all post telephones are connected to Epping signalbox and all messages are recorded. When Keon Park or Lalor are switched in the post telephones are connected to the controlling panel and the Signaller at the panel will be responsible for the issue of Caution Orders. The Post Telephones must not be used for the transmission of Caution Orders in this case. Posts LAL 104 and LAL 106, however, are permanently connected to Epping signalbox.

The instructions for issuing Caution Orders via the post telephones are similar to those for Newport to Laverton (see SW 397/94) except that:

1. The Track Route Line on the VDU indicates that the points are set and locked for the intended movement.
2. The Driver does not examine the position of the points before the Caution Order is issued.
3. If the Track Route Line is not displayed, the Signaller will arrange for a competent employee to place the points to the hand operating position and operate them to the required lie. If a competent employee is not available the Driver will perform these instructions. The points may be left in the hand operating position after the train has departed.

Caution Order 2377 will be used when passing Posts KPK 101, 102, 103, and 107; LAL 102, 104, 106, and 107 and EPP 121, 122, 123, 125, 126, and 127. Caution Order 2367 will be used when passing Posts KPK 104; and LAL 103 and 105.

All the points in the Epping station area are fitted with Electro-Hydraulic Point Machines. If it is necessary to manually operate one of these machines, the hand locking bar must be applied prior to a train passing over the points. The 'Power-Manual' switch must only be returned to the 'Power' position by a Signal Maintenance Technician.

Circular O 2510/89 is cancelled. Insert the above after page 35-8, Book of Rules. (SW 55/96, WN 7/96)

(13.02.1996) **Metrol - Setting Back Trains**

Whenever it is necessary to set back a train within the area controlled by Metrol (Richmond, East Richmond, Clifton Hill, North Melbourne and South Kensington) the following instructions must be observed.

1. The permission of the Senior Train Controller, Metrol, must be obtained before any train is set back. The Senior Train Controller must personally supervise the set back movement.
2. Prior to granting permission, the Senior Train Controller must ensure that all applicable Fixed Signals have been placed at Stop and that the Signaller has applied all Track Block, Point Sleeve, and other commands.
3. If another Train is approaching the section of line where the set back movement is to take place, the Senior Train Controller must ensure that the approaching train has stopped and its Driver advised of what is to occur. The Driver must be instructed not to move the train until advised by the Senior Train Controller. This instruction must be confirmed by the Driver.
4. A competent employee must be in position on the leading vehicle to signal to the Driver prior to the set back movement taking place.

If the Senior Train Controller is not on duty, the Train Controller in charge of the operating floor must carry out the duties listed above.

Insert as a new instruction after page 35-8 of the Book of Rules. (SW 025/96, WN 6/96)

14.02.1996 **Korong Vale - Kulwin - Robinvale**

On Wednesday, 14.2.96, the Korong Vale - Kulwin - Robinvale radio channel was altered from Channel 5 to 8. Amend page 7, MTP General Instructions. (SW 71/96, WN 8/96)

16.02.1996 **North Dynon - Specialised Container Transport Sidings**

On Friday, 16.2.96, baulks were placed 127 metres from the end of F Shed Sidings to allow the construction of a new unloading dock. No more than 5 wagons are to be placed into F Shed on either the North or South side siding. (SW 80/96, WN 8/96)

18.02.1996 **Dunolly**

On Sunday, 18.02.96, the following alterations took place at Dunolly

1. The two Crossovers in the centre of No 2 Road were reversed (i.e. the Up end crossover was altered to give direct access for Down movements while the Down end crossover was altered to give direct access for Up movements). The existing Annett locking on both crossovers was retained.
2. A new dead end Broad Gauge siding was constructed at the Up end of No 3 Road and leads from the Up end entrance to the Vicgrain facility. This siding gives 300 metres clear standing room. A WSa lever was provided on the Siding points.

Amend Diagram 12/91. (SW 65/96, WN 7/96)

(20.02.1996) **Book of Rules, Section 22, Rule 5 (Failure of Electric Staff Instruments)**

The following is to be added to Rule 25, Section 22, Book of Rules:

f) Suspension of Electric Staff System and issue of Train Authorities
Once the Train Controller has suspended the Electric Staff System and authorised the issue of Train Authorities, the Electric Staff Instruments must not be tested until the Signal Maintenance Technician is in attendance and requests the Signallers to conduct a test.
If a Train Authority has been issued, the Instruments must not be tested until the train for which the Train Authority was issued has arrived complete and the Authority cancelled.

(SW 49/96, WN 7/96)

(20.02.1996) **Use of Emergency Track Circuit Jumper Cable in Suburban Electrified Area**

All Diesel and Steam Locomotives, Railmotors, Electric Trains, and certain Track Machines are equipped with an Emergency Track Circuit Jumper Cable which is to be used in accordance with instructions outlined in the Book of Rules.

The Jumper must not be applied within the suburban area when the overhead wiring has been disarranged,even though the opposite or parallel line has been obstructed. If the Driver is in doubt as to whether the overhead wiring has been disarranged, the Jumper must not be applied.

The provisions of Clauses 1, 2, 4, 5, and 6, Rule 2a, Section 13 of the Book of Rules must be observed.

(SW 42/96, WN 7/96)

(20.02.1996) **Brunswick - Coburg**

The running signals on the following posts have been electrically lit: Post 31, 34, 42 and 44. Note the two Disc signals on Post 42 are still oil lit. (SW 68/96, WN 7/96)

(20.02.1996) **Somerton - Blue Circle Southern Cement Coy Siding**

The Blue Circle Southern Cement Coy's Siding leads in the Down direction from the Steel Mains Siding at Somerton. The siding comprises two Dual Gauge lines. The left hand line is the 'Outer' or 'Locomotive Release Track' and the right hand is the 'Inner' or 'Loading Track'. The Outer and Inner tracks merge into a single dead end at the far end which will accommodate 13 bogie cement wagons. A white marker board with a black cross indicates the point at which loaded wagons are to be placed.

Vehicles of both gauges are not to be placed in the siding at one time. While a Broad Gauge train or locomotive is operating in the Blue Circle Siding, a second Broad Gauge train must not be allowed to enter Siding A. A second Standard Gauge train must not be permitted to proceed past Dwarf SOM/V6. If a Broad Gauge vehicle is red carded at the siding it must be cleared from the siding and placed in the dead end spur in Siding A at the Up end of Somerton yard. A red carded Standard Gauge vehicle must be placed in No 4 Road, Somerton.

The switches for the yard lighting and warning devices are located in a box secured to the light pole at the entrance to the siding. The warning devices must be activated prior to a train or locomotive entering the siding.

Insert after page 35-8, Book of Rules. (SW 52/96, WN 7/96)

(20.02.1996) **Protection of Running Lines**

The PTC policy on secure facing points at sidings and providing protection against vehicles rolling out of sidings is:

1. Goods only lines with line speed 30 km/h or less: Main line points equipped with Hand Locking Bar, Pin, and Padlock. Hinged Derail in Siding.
2. Goods only lines with line speed 50 km/h or less: As for (1) with a 30 km/h speed restriction over main line points.
3. Goods only lines with line speed 80 km/h or less. Master Key, Annett Key, Staff or Switch Lock rodded to Derail in siding.
4. Other Goods only lines, and all lines where Passenger trains are run: As for (3), but rodded to Catch Points, Safety Points, or a Derail and Crowder. (SW 62/95, WN 7/96)

21.02.1996 **North Dynon - Agents Area**

On Wednesday, 21.2.96, a hand locking bar was installed on the Up end points of the crossover leading from the Standard Gauge Ladder Road to the Middle Road. The bar is secured by a 4D padlock and the keys are held by SCT employees. The bar will normally be locked on and must only be unlocked for SCT shunting operations. Access to the Standard Gauge Ladder track may be arranged after consultation with SCT.

This Circular is to be read in conjunction with SW 369/95. (SW 75/96, WN 8/96)

21.02.1996 **Chiltern Loop**

From Wednesday, 21.2.96, the Down end Cripple Road will not be available for use. The points have been clipped normal. (SW 94/96, WN 9/96)

21.02.1996 **Springhurst**

From Wednesday, 21.2.96, Springhurst will no longer be available for crossing trains, but may continue to be used for follow on movements provided a competent employee is in attendance. Points 10 and 31 have been secured to lie for No 1 Road. (SW 92/96, WN 9/96)

21.02.1996 **Wodonga Loop**

From Wednesday, 21.2.96, the Up end Cripple Road will not be available for use. The points have been clipped normal. (SW 93/96, WN 9/96)

21.02.1996 **Bairnsdale**

On Wednesday, 21.2.96, the A pattern Annett Key was removed from the Closing Lever on the platform and returned to the Office of the Superintendent Safeworking until again required for train running. All fixed signals at Bairnsdale will be secured at Stop. (SW 73/96, WN 8/96)

25.02.1996 **Frankston - Somerville**

From Sunday, 25.2.96, the Electric Staff System was replaced by the Automatic Electric Staff System. The existing instruments and staffs have been retained. Frankston and Somerville are attended Staff stations and Rule 3, Section 24, Book of Rules, will not apply to either location.

Amend page 102, MTP General Instructions. (SW 72/96, WN 8/96)

27.02.1996 **Maryvale**

From Tuesday, 27.2.96, the Industrial Estate Sdg was book out of service. (SW 110/96, WN 10/96)

29.02.1996 **Cheltenham**

From Thursday, 29.2.96, the Signalbox hours will be

Monday to Friday.....0720 to 0830 hours and 0920 to 1025 hours.

(SW 123/96, WN 10/96)

29.02.1996 **Bairnsdale**

On Thursday, 29.2.96, the two hand operated Derails on No 4 Road, the Derail in No 3 Road extension (Down end), and the Hand Locking Bars fitted to the points in the Up end of No 2 Road and the Down end of No 3 Road were removed. (SW 117/96, WN 10/96)

01.03.1996 **Maryborough**

Between Friday, 1.3.96, and Tuesday, 5.3.96, the following track and signal alterations were commissioned:

1. The Dual Gauge line was commissioned. The Maryborough - Ararat line was converted to Standard Gauge and merges with the Broad Gauge line at the site of the Plunger Locked junction points. From this point the line is Dual Gauge through No 1 Road and on to Dunolly.
2. No 2 Road was reclassified as a siding.
3. No 5 Points (Dual Gauge points Main Line to No 2 Road at Up end) were provided. The points are rodded to a Hayes Derail and Crowder in No 2 Road.
4. Dwarf 16 was relocated to the Down side of Inkerman Street.
5. A new set of points was provided leading from No 2 to No 3 Roads at the Up end.
6. No 17 Points (Dual Gauge points Main Line to No 2 Road at Down end) were provided. The points are rodded to Hayes Derails and Crowders in Nos 2 and 3 Roads.
7. The Main Line points to the Castlemaine line were commissioned.
8. A 2.5 km track circuit approach was provided to allow DICE operation to and from the Avoca and Dunolly lines. DICE operation will not be brought into use until further notice.
9. Post 10 was abolished.

Amend the Book of Signals. (SW 100/96, WN 9/96)

01.03.1996 **Sea Lake**

On Friday, 1.3.96, the Hand Locking Bar fitted to the points leading to No 3 Road at the Down end was removed. (SW 131/96, WN 11/96)

01.03.1996 **Nagambie**

On Friday, 1.3.96, the following alterations were carried out:

1. No 2 Road was abolished. Nagambie is no longer available for the crossing of trains and was reclassified as an Intermediate Siding in the Seymour - Nagambie Block Point section.
2. The Up and Down Home Signals and Plunger Locking was abolished.
3. The Main Line points were secured with Large Type Master Key locks rodded to Hayes Derails and Crowders in No 3 Road.
4. The Block Point location was retained and the Location Boards were repositioned 1000 metres from the Block Point.
5. An Intermediate Siding Board was provided adjacent to the station building.

(SW 98/96 & 104/96, WN 9/96)

01.03.1996 **APM Siding, Maryvale**

From Friday, 1.3.96, Australian Paper Manufacturers (APM) will cease private rail operations between the APM mill and the Maryvale Exchange Siding. Future rail operations will be performed by V/Line.

Safeworking Procedures

Siding Conditions are in force over the APM Siding. Permission must be obtained from the Signaller, Morwell, prior to a train or light engine departing from the Exchange Siding or from the APM Siding. The Driver must advise the Signaller, Morwell, when the train arrives complete at the APM Siding. All communications with the Signaller, Morwell, will be carried out via radio.

The Signaller must record the following details across the figure line of the Train Register: time permission is granted for outward journey together with Driver's name and locomotive number; time of arrival at APM siding; and time of departure from APM siding.

The operation of Road Rail vehicles over the siding must be carried out in the same manner.

Maryvale Exchange Sidings

Hand operated Hayes Derails will be provided in the Up end spur and the Down end of No 3 Siding. The crossover in the centre of Nos 2 & 3 Sidings will be secured by a Hand Locking Bar in the normal position. Both derails and the crossover will be secured by V5PSW padlocks. The catch points at the Down end will be secured closed and the CCW lever removed.

No 2 Siding is to be kept clear at all times.

The Down track circuited approach to Tramway Road is 20 metres long. A Notice Board will be provided at the commencement of the approach track circuit, instructing Drivers not to enter the crossing until the flashing lights are operating and the booms have lowered.

Australian Paper Manufacturers Siding

The container terminal within the APM mill is located on No 1 Siding and is operated by Toll Transport. A hand locking bar is provided on the Up end points leading to No 1 Siding and must be applied and locked On whenever loading is taking place in the Siding. The locking bar is secured by a 4D padlock.

Hand operated Hayes Derails have been provided within the sidings leading towards the APM factories. The Hayes Derails are secured on at all times with APM padlocks and the keys are retained by APM security.

Toll Transport is responsible ensuring the rail gates in the perimeter fence are opened as required. A Notice Board is erected 150 metres on the Up side of the gates and reads 'Do not pass this point unless gates are open. If closed contact Centrol'. If the gates are closed, the Train Controller must contact Toll Transport or APM security.

A second Notice Board is placed on the inside perimeter of the fence and reads 'Permission from the Signaller Morwell required to pass this point.

The railway weighbridge located at the mill will be spiked out of use.

Insert in Section 34 of the Book of Rules. (SW 74/96, WN 9/96)

03.03.1996 **Fawkner**

From Sunday, 3.3.96, the signals on Posts 63, 64, 65, 66, and 67 were electrically lit.

(SW 116/96, WN 10/96)

03.03.1996 **Somerville - Long Island Junction - Hastings**

From Sunday, 3.3.96, the Electric Staff System was replaced by the Automatic Electric Staff System. The existing instruments and staffs have been retained. Somerville and Hastings are attended Staff stations and Clauses a, b, c, d, f, g, & h, Rule 3, Section 24, Book of Rules, will not apply to either location. The Intermediate Electric Staff System Rules will not apply to this section.

Procedure 19, Section 34 has been cancelled. A new procedure has been issued for the operation of this section. The procedure is based on the Intermediate Electric Staff System rules (Section 23) except for:

1. The 'Staff In' and 'Staff Out' indications at Somerville and Hastings are shown by illuminated indicators while the audible tone is sounding (Clause 3a)
2. Clause 5b, Section 23, is not applicable. Instead, the Signaller must obtain permission from the Train Controller and then withdraw a Staff from the Instrument.
3. Clause 5c. After inserting the Staff in the instrument at Long Island Junction, the Competent Employee must enter the Time of Arrival (column 10) and the Electric Staff number (column 11) into the Train Register Book
4. Clauses 5d and 5e are not applicable. Instead, the Competent Employee must advise the Train Controller via the Train to Base Radio that the train has arrived complete, is in clear of the junction, and the Staff inserted into the Instrument. A note must be made on the Train Graph.
5. Clause 6a is not applicable. Instead, the Driver must confer with the Train Controller to obtain permission to withdraw a Staff at Long Island Junction.
6. Clause 6 is replaced by:
   Prior to departure from Long Island Junction, the Driver must confer with the Train Controller and obtain authority to withdraw a Staff from the Intermediate Instrument.
   The Competent Employee must go to the safeworking cabin and depress the button located above the instrument for 5 seconds. While the button is depressed the needles on the Indicator should both deflect to the 'Staff In' position. When the audible tone commences, the Staff can be withdrawn from the Instrument. The left hand indicator must then be turned and held down for 5 seconds to stop the tone. If both indicators do not deflect to the 'Staff In' position, the Train Controller must be advised.
   The junction points can then be unlocked, and the flashing light signals activated and the Up Home signal cleared from the pushbuttons. Once the train has cleared the junction the flashing lights and Up Home must be restored to normal. The junction points can then be restored, the Staff removed from the lock, and the points tested. The Staff is then handed to the Driver.
7. The Master Key is located at Somerville (Clause 7) and is simply 'locked away'. It is not to be released except under instructions from the Train Controller.
8. Clause 8 is not applicable.
9. If the Instrument at Long Island Junction fails, but a Staff can be withdrawn from Somerville and Hastings, Clauses 9a and 9c are observed. Clause 9b is not applicable. If a Staff has been left in the Instrument at Long Island Junction due to a failure, the Signal Maintenance Technician must be contacted to transfer the Staff.
10. Clause 10 basically applies, except that Train Authorities must be issued according to Rule 7, Section 24 (Automatic Electric Staff Rules). Train Authorities are exchanged directly between the Train Controller and the Driver. Clause 10d does not apply.
11. Clauses 11 and 12 are not applicable.
12. Clause 13 (Balancing of Staffs accumulating at Long Island) is replaced by
    The Train Controller must be advised whenever the Signal Maintenance Technician requires to transfer Staffs from Long Island Junction.
    Before removing the Staffs, the SMT must obtain authority to test the section by obtaining and replacing a Staff from the Train Controller. The required number of Staffs may then be removed from the instrument. The Train Controller must then be advised and the Train Controller must arrange for the Signallers at Somerville and Hastings to test their instruments. The SMT must not depart Long Island Junction until advised of the results of this test.
    When the SMT arrives at either Somerville or Hastings, permission must be obtained from the Train Controller to insert the Staffs. The SMT must first test the instruments. The Staffs may then be inserted in the instrument. The instrument must then be retested and the Train Controller advised.
13. The following information must be recorded in the Train Register at Long Island: the arrival and departure time, and the Staff number.

Amend page 102 MTP, General Instructions (SW 107/96, WN 10/96)

(05.03.1996) **Route Indicators**

Route Indicators are provided on certain Home Signals at junctions, generally where the same speed indication applies to more than one route. There are three types of Route Indicators in use: the Letter type, the Feather type and the Arrow type.

The Letter type Route Indicator displays its indication by means of an illuminated white or blue letter.

The Feather type Route Indicator displays its indication by means of a series of consecutive white lights pointing in the direction in which the route is set.

The Arrow type Route Indicator displays its indication by means of an illuminated white or blue arrow pointing in the direction in which the route is set.

All Route Indicators are only illuminated when the applicable route is set and the Signal is at Proceed. Route Indicators may be placed above or below the head of the signal.

Failure of the Route Indicator

Train Stationary at or near the signal

If a signal is displaying a Proceed indication and the Route Indicator is not illuminated, the Driver must contact the Signaller to determine if the intended route is set. If so, the train may proceed in the usual manner.

Train in Motion

If the train is in motion when the Driver observes the Route Indicator has failed to illuminate, the Driver must not attempt to stop the train if there is insufficient distance to stop safely. If the train has been incorrectly routed, the train must not be set back without the correct authority being obtained.

Insert this Procedure following page 27-67 of the Book of Rules. (SW 81/96, WN 9/96)

(05.03.1996) **Bendigo**

During periods of heavy traffic, authority is granted for locomotives to stand in No 2 Road within the protection of the Fixed signals. The locomotive must be secured with the hand brake applied and during or after inclement weather, Rule 4, Section 11, must be observed. A Signaller must be on duty at all times while the locomotive is standing in No 2 Road and the Train Controller must be informed.

Insert this Procedure in Section 34 of the Book of Rules. (SW 95/96, WN 9/96)

05.03.1996 **Lang Lang**

From Tuesday, 5.3.96, Lang Lang will no longer be available for crossing trains. Lang Lang may be used for follow on movements provided a competent employee is in attendance. The Main Line points at each end of the station will be permanently secured to lie for the Main Line. (SW 129/96, WN 11/96)

07.03.1996 **West Tower - Melbourne Sidings**

From Thursday, 7.3.96, 5 Shed and No 3 Road, 4 Shed, will be used by Toll Transport to load containerised paper products for APM. Warning Lights, Sirens, and hand operated Hayes Derails have been provided. Prior to commencing loading operations, the nominated Toll Transport person must ensure that all rail operations have ceased and that the Derails have been locked on. Prior to a rail movement into either of these roads, the competent employee in charge of the movement must ensure that the Derails are locked off and that the Warning lights and sirens are activated.

Insert in Section 34, Book of Rules. (SW 134/96, WN 11/96)

07.03.1996 **Broadmeadows - Seymour**

The Track Shunting Device (TSD) is a sensor unit which shunts the track circuit for 20 seconds whenever a metal train wheel passes the sensor. The shunting of the track circuit is in addition to the normal shunting through the train wheels. The TSD provides a backup mechanism to shunt the approach track circuits of electrically protected level crossings.

Track Shunting Devices were commissioned on 7.3.96 at the following crossings: Smeaton Ave (Pedestrian) and Almurta Ave (Pedestrian) (Broadmeadows), Dunkeld St (Pedestrian) and Somerton Rd (Somerton), Yan Yean Rd (Donnybrook), Whittlesea Rd (Beveridge), Barbers Lane, Boundary Road, and Magpie & Stump Rd (Wallan), Escrites Rd (Heathcote Junction), and Station Entrance (Seymour).

Normal Sprinter service resumed on this line commencing with Train 8315 on Saturday, 9.3.96.

(SW 147/96 & 154/96, WN 11/96 & 12/96)

(12.03.1996) **Track Shunting Device**

The following level crossings on the Bendigo line have been fitted with Track Shunting Devices: Ruth St and Taylors Rd (St Albans), Melton Rd, Calder Park Dv, and Holden Rd (Sydenham), Calder Hwy and Watsons Rd (Diggers Rest), Gap Rd (Sunbury), Tylden Rd and Central Rd (Woodend), Lauriston Rd and Central Carlsruhe Rd (Kyneton), Sutton Grange Rd and Old Calder Hwy (Elphinstone), Parker St (Castlemaine), and Oak St (Bendigo). (SW 126/96, WN 10/96)

12.03.1996 **Traralgon - Morwell**

The following authorised Composite Electric Staff Working will take effect from Tuesday, 12.3.96, coinciding with the introduction of the new Timetable.

The following trains are authorised to use the Composite Staff:

Sunday ..... 0462/9462 (Ticket A)
Monday ..... 9428 (Staff and Ticket B), 9460/9462 (Ticket A)
Tuesday - Thursday ..... 9428 (Staff and Ticket B), 9459 (Full Compo), 9460/9462 (Ticket A)
Friday ..... 9428 (Staff and Ticket B), 9459 (Full Compo), 9460/9462 (Full Compo)
Saturday ..... 9459 (Full Composite Staff)

Whilst Train 0462/9462 or 9460/92 is in the process of shunting Maryvale, the Driver must retain possession of the Ticket 'A' portion of the Composite Staff. When the APIX message is sent from Traralgon for Trains 0462 and 9462 the Driver must include both train description numbers in the text of the message (ie either 0462/9462 or 9460/9462). Both numbers must also be entered in Column 1 of the Train Register Book at both Morwell and Traralgon.

This amends page 4, SW 308/95. (SW 165/95, WN 12/96)

15.03.1996 **Dunolly**

On 15.3.96, a Fixed Point Turnout was installed at the Up end of Dunolly Yard connecting B Siding to the Standard Gauge Main Line. Amend Diagram 12/91. (SW 156/96, WN 12/96)

17.03.1996 **Ballan**

On Sunday, 17.3.96, the Main Line points were straight railed and Ballan will no longer be available for crossing trains. The following alterations took place:

1. Points 9 and 22, Plungers 8 and 23, and point detection equipment were removed.
2. Homes 2 (LH arm Post 2), 3 (Post 5), 27 (Post 4) and 20 (RH arm Post 7B) were abolished.
3. The Dead End siding leading from No 2 Track was abolished, together with associated Annett Lock and rodded Derail and Crowder. Annett Key Release Lever 20 was abolished.
4. Levers 2, 3, 9, 12, 20, 27, and 29 were sleeved normal. Levers 8 and 23 became pilot levers.

To prevent Up and Down trains from approaching Ballan at the same time the circuits have been altered so that it will not be possible to clear the Departure signals at Bank Box Loop or Bungaree Loop until the Signaller, Ballan, has placed the respective Up or Down signals at Ballan to proceed.

Amend Diagram 22/95. (SW 166/96 & 167/96, WN 12/96)

17.03.1996 **Gisborne**

On Sunday, 17.3.96, the following alterations took place:

1. The hand operated level crossing gates at Station Road were replaced by Boom Barriers and Flashing Lights.
2. Post 5 was moved to a new location 10 metres from the Down end of the Down platform.
3. Lever locks were provided on Levers 3 and 5.
4. Repeaters were provided for the Up and Down Distants on the block shelf.
5. Up and Down approach annunciators were provided.
6. Lever 7, (Crossing Lever) was commissioned.
7. Switching facilities were provided.

The Block Hours for Gisborne are

Monday to Wednesday ..... 0545 until 8017 clears
Thursday ..... 0545 until 8017 clears and 1515 until 9083 clears
Friday ..... 0545 until 8017 clears and 1515 until 9084 clears
Saturday and Sunday ..... Switched Out

Amend Diagram 30/90, and Pages 56 and 57 MTP General Instructions (SW 152/96, WN 12/96)

(19.03.1996) **West Tower**

The instructions relating to Dock Links Road in SW 139/96 are cancelled. (SW 153/96, WN 11/96)

(19.03.1996) **Frankston**

Clause a, Procedure 17, Section 34, Book of Rules (Giving Line Clear for Up trains) is amended by the addition of:

Prior to granting permission for the withdrawal of a Staff at Somerville, the Train Controller must confer with the Signaller at Frankston and ascertain if the line is clear as far as Post 9 or Post 10. If the line is clear, the Train Controller may grant permission for a Staff to be withdrawn at Somerville.

SW 122/96 is cancelled. (SW 133/96, WN 11/96)

(26.03.1996) **Tottenham - Pyrenees Loop**

The instructions for operating the Standard Gauge line were re-issued incorporating the amendments since the last general issue. No major alterations have been made. Circulars SW 395/95, 564/95, 572/95, 6/96, and 38/96 have been cancelled. (SW 107/96, WN 12/96)

(26.03.1996) **Bungaree Loop - Ballarat**

Due to circuitry alterations, the instructions (SW 475/96) concerning running crosses at Bungaree Loop and the checking of trains at Ballarat have been cancelled. (SW 161/96, WN 12/96)

Continued on Page 52

PRINCES BRIDGE - RICHMOND

(Continued from March 1996)

Richmond

Opening. The line from Princes Bridge to Windsor was opened in three stages. These were to Punt Road in 1859 (8 Feb); thence to Cremorne (on the north side of the river) with a permanent Richmond station opened at Swan Street, and Punt Road closed (12 Dec); and on to Windsor in 1860 (22 Dec). After a false start, trains commenced running through from Princes Bridge to Brighton Beach in Oct 1862; this was the same month that duplication was completed from Princes Bridge to Windsor. The branch line from Richmond to Hawthorn was also opened in stages, being completed in 1861 (13 Apr).

The three temporary terminals enabled the lines to be used while bridge works were in progress - one bridge over Punt Road and two over the River Yarra. The book *VR to '62* does not state when Cremorne was closed. Level Crossings existed between Princes Bridge and South Yarra at Jolimont Road, and Swan, Dunn, and Balmain Streets.

Interlocked gates, the first in Victoria, were opened by the Company at Swan Street in 1873. A fine view of the gates and signal box, both of unfamiliar design, is found in *Steam Suburban*, page 24 (but the pages are not numbered - start counting from the title page).

Expansion. At least two of the four additional tracks from Princes Bridge reached Punt Road in 1883 (23 Sep?) where a signal box was opened in 1884 (11 May). The expansion necessitated re-bridging Punt Road, establishing a new high-level Richmond station with six curved platforms, and newly bridging Swan Street. The Hawthorn tracks would be above the existing station. Further on, a new bridge was required over the River Yarra to carry the two additional Caulfield lines.

As a first step, the 1873 signal box at Swan Street was replaced by a temporary box on the platform in 1884 (4 May). Over a year later, the two existing tracks, still carrying all traffic, were diverted through the new high-level platforms for the Brighton line and over a new bridge across Swan Street (5 Jul). The Hawthorn line tracks were raised to connect; the new high-level junction was worked by a new temporary box and the level crossing and former temporary box were abolished.

Later in 1885 (29 Nov) the Hawthorn tracks were extended separately from Punt Road over a new bridge and through their own high-level platforms. The new permanent Richmond signal box was established at the Up end of the Up Brighton platform and the junction and temporary box at the Down end were abolished.

Figure 11 shows the area to be controlled by the new box. It was not however complete at this stage because the Caulfield lines had to wait while the Brightons were diverted temporarily over the new river bridge to enable the existing one to be overhauled. The Caulfield lines were finally commissioned in 1886 (3 Oct). Even then some temporary arrangement would have been needed near Punt Road until the new Jolimont box (Figure 5) was opened to provide a means for Hawthorn line goods trains to access the yard via the Brighton lines.

Signals. The signals are based on the list in the 1898 General Appendix, photos showing Post 4, which is described as a 'Nine Arm Bracket' (see below for the other two arms), and a plan showing Post 7. This illustrates details of the rear-end collision which occurred in dense fog in the Up Brighton platform at Richmond on 18 July 1910. Co-acting arms working with the three Up Homes on Post 4 were fitted lower down by 1913. A good view of Richmond station (VR H1128), evidently taken from Post 7, is found in *Steam Suburban*, page 30; this shows the crossovers in the foreground, the end of the tall signal box, the curved platforms, and the three Up Homes on Post 4, high up in the distance.

A new signal box, Richmond B, had been established at Balmain Street, towards South Yarra, in 1883 (15 Oct), at about the time that Block instrument working was introduced. In 1896 new interlocked gates were provided at Dunn Street (new box) and Balmain Street crossings. The Down Starting signals for the Caulfield and Brighton lines on Post 4 each then gained a Distant arm below; each Distant applied to both boxes. Dunn Street was not a Block Post, while Balmain Street could by now be opened as such only on special occasions. In 1898-99 underline bridges were provided at the two crossings; the gates and boxes were then abolished.

Around 1899-1900 intermediate Home signals were provided in all sections between Richmond and Caulfield, excepting Toorak - Armadale, for use by temporary Block Posts on Race days; the signals were

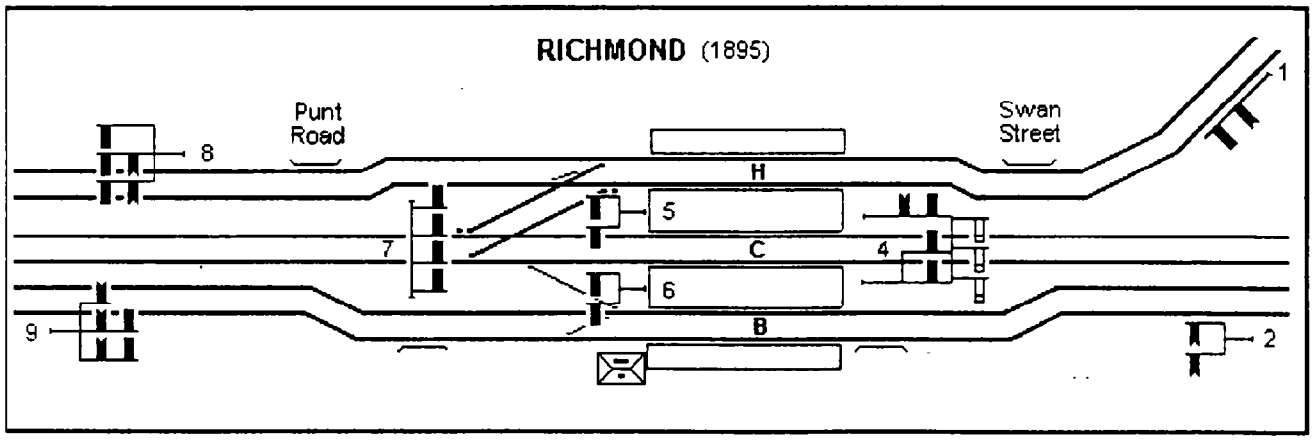

Figure 11

normally crossed, and were usually mounted above station Distants. In particular, Richmond gained crossed Homes above both Distants on Post 2. The temporary Block Posts lasted until three-position signalling was installed.

The application of Lock& Block working and track-locking of Starting signals through Richmond were covered under Jolimont Junction.

Three-Position Signalling. Richmond signal box was phased out over a four-year period. Three position automatic signalling was installed from Richmond to Prahan and Hawksburn in 1915 (4 Oct). This installation was occasioned in part by the need to provide a new signal box at South Yarra to control the junction with a new, second, pair of tracks to Caulfield, the Local lines.

in 1916 (13 Jul) the two trailing crossovers were abolished. The the new signalling was installed from Jolimont Junction on the Brighton lines in 1918 (1 Sep) and on the Caulfield and Hawthorn lines in 1919 (1 Jun), following abolition of the double crossover (31 May). On the Brighton and Caulfield lines it included Richmond station and joined the existing signalling beyond. The box would now have no control over the nearest four running lines.

Finally, three-position signalling was installed Richmond - East Richmond on 31 August using the new light signals. Richmond box was now redundant and was abolished either on this date or on 6 September.

New Station 1958-1966. The need arose to bring the 1915 Caulfield Local lines in from South Yarra to Jolimont Junction, and to provide also a new pair of tracks in from Burnley. A completely new station with five straight island platforms was build on the city side of the old platforms and extending over Punt Road. Five new two-track bridges were also required over a widened Swan Street to replace the existing bridges.

Although the new platforms were straight, the tracks from Swan St were still necessarily curved. In fact, according to a scale plan, the first of the new bridges crossed Swan St at a sharp angle of about 30 degrees, whereas the new platforms crossed Punt Road at about 80 deg., which was about 10 degrees with respect to Swan Street. A good view taken from above Swan St and showing the old platforms still in use by with the first two island platforms clearly seen in the distance, appears in the *VR News Letter*, Sept 1958.

The Brighton line trains were the first to use the new station, in 1958 (30 Nov). The tracks were diverted just north of Dunn Street to a widened embankment and over a new bridge, then past the old station to the new platforms; the old Up Brighton platform could then be demolished. The Caulfield tracks were diverted in 1959 (31 May), and the Hawthorns some months later (8 Nov); the old station was then out of use. The first real gain occurred in 1960 (2 May), when the Caulfield Local lines were extended in from South Yarra and through the third island to Jolimont Junction, the Hawthorns having meanwhile been transferred to the fourth (19-26 Mar).

The next move occurred in 1966/1967 when the new Burnley Up line (1 Aug) and Down line (9 Jan) were opened, and the fifth island platform at Richmond was brought into full use. The two new tracks were laid on the Up side of those existing to Burnley, but the four tracks were signalled as Down-Down-Up-Up, with the

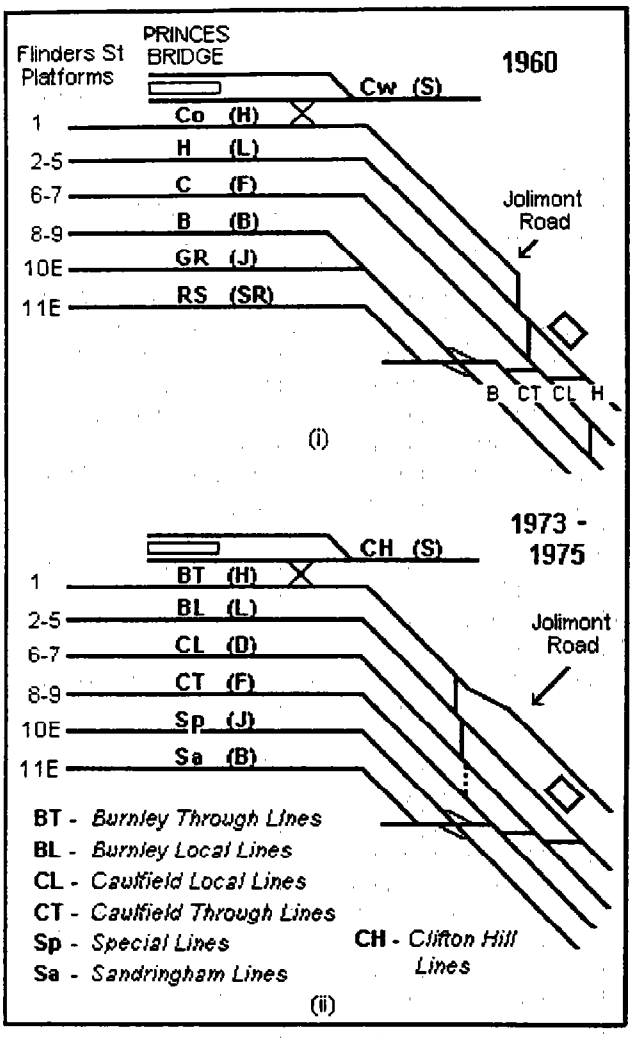

Figure 12 (i) - (ii)

Local tracks on the outside and the Throughs in the centre. East Richmond was served only by the Locals.

Jolimont Junction (resumed)

In the 1960 rearrangements, the Brighton lines were diverted, some months early, to connect straight on to the GR lines in place of the two sidings shown in Figure 10 (1959 - 20 Dec). The B lines on the Flinders Street side were slewed to connect with the GR lines, so that the Brighton trains could still used platforms 8-9 Figure 12(i)). The next pair, the Caulfield Throughs served platforms 10E-11E, where various peak-period expresses already terminated. The third pair. the Caulfield Locals from 2 May, joined the former Caulfield lines to run into Flinders Street platforms 6-7. The double crossover near Richmond was controlled from a new panel in Jolimont Junction box, and enabled existing running patterns South Yarra - Caulfield to be maintained. The Hawthorn lines were unaffected.

1966/67 Works. In these works, the junctions between the two Down Burnley lines and between the two Ups were provided about 145 metres on the Jolimont Junction side of Richmond station. The Down Home (No 86) showed Medium Speed for both routes, but this may have caused some confusion because illuminated arrows were later mounted at the top of the mast to indicate which of the two routes was set.

1973 Works. In 1973 (4 Feb) the Burnley Through lines were extended from the junction near Richmond to

run behind E box and join the Country lines beyond as shown in figure 12 (ii); these latter lines were then renamed to become also the Burnley Throughs. (The two double crossovers outside the box as in (i) had already been moved further towards Flinders Street (1969-70) to facilitate construction of tunnels for the Underground.) The former Hawthorn lines were now renamed the Burnley Locals, and the Down track crossed the Throughs outside Richmond by means of a flyover. Signal 86 was lost in the rearrangement.

Later in 1973 (9 Dec) the inelegance of Figure 12 (i) was mitigated and the B lines were restored to their original positions, but these now became the Caulfield Through Lines and were used by Frankston and Broadmeadows trains. The C lines were now designated as the Caulfield Locals, and were still used by Dandenong and Williamstown trains. The Brighton line trains (Sandringhams) were now relegated to platforms 10 and 11, with the Race lines renamed, and some trains through routed to St Kilda (mostly) or Port Melbourne. (The Collingwood lines had been renamed back in 1965, at the time of the Princes Gate project.) Some years later, around 1980, platforms 10 East and 11 East were renumbered 12 and 13.

1975 Works. The prefix letters for automatic signals on the Caulfield Local and Through lines were changed respectively from F to D and B to F (20 Jul). The letters on the Sandringham lines were changed from SR to B (7 Sep). The old prefixes are shown bracketed in (i) and the new ones in (ii). The connection shown in (ii) from the BT lines to Princes Bridge station was abolished (3 Aug); this made space available for construction of a ramp to the City Circle Underground Loop. During this year, work was continuing with replacement of Semaphore signals with Lights, and with other preparatory works to the commissioning of a new electronic panel signal control centre.

New E Box. More automatic signals were replaced with Lights in 1976 (H18 and H22 on 15 Feb). The 1919 E box in the 1901 building was replaced with a signal control centre installed in a new building adjacent to the Down Burnley Through line near Jolimont Road (28 Feb). At the same time a new double crossover between the Caulfield Local and Through lines, shown broken in (ii), was brought into used in place of the existing crossover near Richmond. A view of the interior of the new centre showing the panel and the diagram is found in *Victorian Rail Ways*, March 1976.

It was noticed in all the new signalling works carried out in the Jolimont Junction area from opening of the first new island platform at Richmond in 1958 that the Home signals were generally set at least a Medium Speed overlap back from the points such that the preceding Automatic did not need to be controlled. Thus there are many Automatics whose normal indications would be shown on diagrams as Medium Speed Warning (R/Y). Semaphore Home No. 56 in Figure 10 during its last years also could show Medium Speed Warning for the straight route. However, most of the new Home Light signals controlled by the new E box could display the illuminated letter 'A', so that multiple Red over Yellows on preceding Automatics may not be seen in practice. Richmond station seemed to be the transition point between four-aspect and three-aspect signalling.

This account has now gone well beyond the intended cut-off year of 1960. However two further facilities provided in the Jolimont Junction area must be mentioned briefly for completeness. In 1981 (4 Oct) the double compound was converted to a single compound (for Sandringham trains) and a separate double crossover provided on the Flinders Street side between the Caulfield Through and Special lines. Also by 1981 (date unknown) a two-way ladder track was provided from the Test Track near Richmond through the Sandringham lines to the CT lines. This gave Sandringham trains access to the Underground.

South Yarra

It had been intended to take the story only as far as Richmond (including mention of Dunn and Balmain Streets), but it would now seem incomplete without carrying on the point where the Caulfield line diverged from the Brighton line. Any diagrams however will be in the form of simple sketches, and some signal numbers may be omitted to reduce congestion.

South Yarra station, originally named Gardiner's Creek Road, was opened in 1860 (22 Dec) when the railway from Princes Bridge was extended from the temporary terminus at Cremorne through to Windsor. A drawing of the river bridge at Cremorne showing its straight lattice girders appears in *VR to '62*, page 56. The railway was duplicated by 1862 (Oct).

Purchase by the Government of the Hobson's Bay lines enabled the Princes Bridge - South Yarra section to be used for extending Gippsland trains into the city. The line from South Yarra to Oakleigh was opened in 1879 (2 Apr) and joined there the railway which had been opened in sections to Sale, and completed in the previous year (1 Mar). The junction at South Yarra was at the Down end beyond the road overbridge. The branch was duplicated to Caulfield in 1881 (12 Dec).

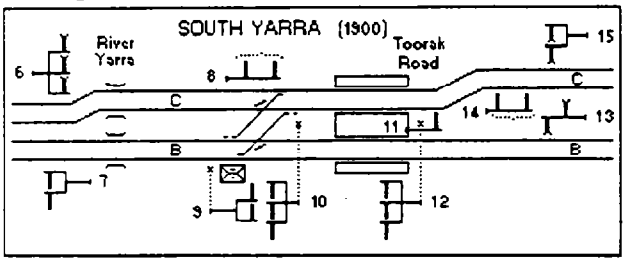

Figure 13

1884-86 Box. A signal box existed in June 1886 situated about midway between the station and the river, and this would be the box set up in 1884 (4 Feb). The Caulfield lines would have been diverted through new platforms to a junction near the new box. The new bowstring girder bridge for their river crossing was described as a 'superior structure' and stated to be the first steel bridge in Victoria. When it was ready in 1886 (20 Jun) the Caulfield lines were taken straight through from their new platforms, and the Brighton lines diverted into them at a temporary junction close to the river and worked from the 1884 box.

After repairs were effected, the original bridge was restored to traffic (3 Oct) with all four tracks now available through from Richmond. The arrangements were then generally as in Figure 13. A particular feature here may have been unique in VR signalling history. Splitting Distants were fairly common in this era and we have met examples already, but the junction was

usually at the arriving end of the station or yard - at places like Carlsruhe, Heathcote Junction, and North Geelong A and C boxes. However, the Distants on Post 15 here refer to the junction ahead of Post 10, and were followed, unusually, by splitting outer Homes - the centre and right-hand arms on Post 12. The additional Distant and Outer Home were removed in 1908 (26 Apr).

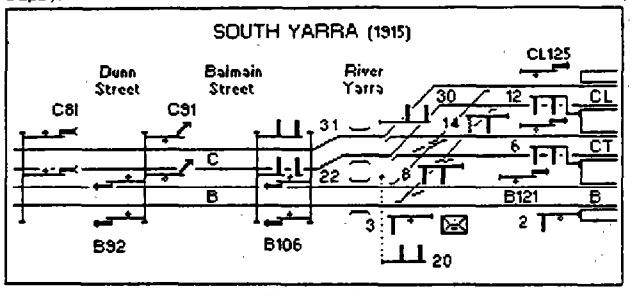

Figure 14

1915 Box. The Local lines from South Yarra to Caulfield were opened in 1915 (4 Oct), and were connected to both the existing Caulfield and Brighton lines at a junction near the river (Figure 14); the points were worked and the signals controlled from an electro-mechanical frame in a new box. The full layout is given in the ARHS booklet *Clear Normal Speed.*

As is well known, this was the first installation of three-position signalling in Victoria, and some differences are seen compared with later practice. Outer Homes 2, 6, 12, 22, and 31 were converted in 1919 (Feb) to Automatics but still controlled by the same levers. Repeating signals B81 and C81 were also converted as three-position signalling was extended north through Richmond station, but Up Distants B88 and C88 (not shown) were abolished. Low Speed "arms" (lights) may have been fitted at this time to the two-armed Homes, but the illuminated letter 'A' for Homes 3, 14, 20 and 30 were not provided until 1931 (8 Nov).

1945 Box. During the early 1940s an alarming dip of about 2 feet (0.6 metre) occurred at the southern end of the river bridge carrying the Up Sandringham track, and a speed limit of 5 mph (8 km/h) was imposed. Despite war conditions replacement was urgently required. To enable the Up Sandringham line to be slewed to a new single track bridge built beside the defective one, the 1915 signal box had to be demolished. This was replaced by a new power box near the station in 1945 (15 Apr) with the layout as in Figure 15. The two emergency crossovers were electrically released from the box. The long double crossover from the Local lines to the Brightons had been abolished in 1944 (26 Jun). Light signals B131 and D131 earlier replaced Semaphores B135 and D135.

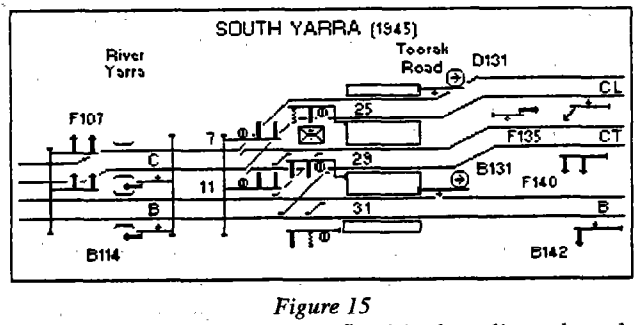

Figure 15

A VR photo showing the Sandringham lines slewed over the new concrete bridge but with the old straight lattice girders seen on the side and with the 1886 bridge still in use for the Caulfield lines appears in Dorman & Henderson's *Electric Railways of Victoria*, page 70. The slews are omitted from Figure 15.

On the four tracks South Yarra - Caulfield, off-peak electric trains generally ran via the Down Through and the Up Local lines, so that they used only the central island platforms. Country trains ran on the outside tracks. In the peaks stopping electrics used the Local lines and expresses used the Throughs. South Yarra

Peak Track Occupancy

Total numbers of trains leaving Flinders Street and Princes Bridge between 5.00 pm and 5.59 pm (1700 and 1759) Monday to Friday on Brighton (B), Caulfield (C), Hawthorn (H) and Collingwood (Cw) lints.

The (HB) column indicates the number of trains included in the Hawthorn (H) totals that are destined for branch lines (Darling, Kew and Ashburton).

Details of trains up to the 1930s were obtained from *Bradshaw's Guide to Victoria.*

Date	B	C	H	HB	Cw
Steam Trains					
Dec 82	8	1	3		
Oct 83	8	2	3		
Separate H tracks now to Punt Road					
Nov 83	7	2	6		
All 6 tracks now to Punt Rd; only 2 thro Rich					
Jan 85	7	2	6		
H tracks now separate through Richmond					
Dec 85	7	2	7		
Oct 86	7	2	6		
C tracks now separate right through					
Nov 86	11	3	6		
Dec 86	11	4	7		
Through trains in peak to Darling and Kew					
Dec 90	11	7	11	3	
Dec 96	8	6	11	4	
C'wood line opened, but CH and H'berg trains only					
Oct 01	9	8	11	4	4
Dec 02	9	10	13	4	5
Preston (Reservoir) and new Nth Fitz now to PB					
Dec 04	9	11	13	4	8
Dec 07	9	12	13	4	9
Dec 09	10	12	13	4	9
C'wood line now has use of whole PB station					
Dec 11	11	12	15	5	11
Electric Trains					
Dec 22	16	18	15	5	16
All Darlings now through					
Dec 23	16	18	20	7	16
Mar 30	14	18	22	7	15
Peak Ashburtons now through					
Dec 34	12	19	26	11	17
Through evening peak Kews withdrawn					
Oct 38	14	21	21	9	17
North Carltons withdrawn					
Feb 50	13	25	22	9	15
Nov 64	12	25	25	10	16
Feb 77	6	20	26	11	11
90/91	5	19	24	9	10
93/94	5	17	26	10	9

could switch out for the Local lines, so that very early and very late trains, and Sunday morning trains, might also be seen on the Down local.

Some Up Frankston line expresses terminated in platforms 10 East and 11 East Flinders Street, and these might be crossed to the Brighton lines at South Yarra rather than at E box. Signal D140 on the Local line was not controlled, perhaps because the speed limit of 20 mph (30 km/h) applying round the curve from Hawksburn meant that the overlap ahead of 25 could stop short of the diamond crossing. But signal F140 on the Through line was very tightly controlled, and it was rare for an express not to be stopped there, and often the driver would trip, which meant stopping again.

Six Tracks. By about 1947 or 1948 both the 1859 and 1886 bridges had been replaced and the new concrete one widened to take six tracks. A works siding was established in 1947 (4 Feb), trailing into the Down Local line ahead of signal 7; an electrically-released 3-lever ground frame was installed at the points, the other two levers working mechanical Dwarfs. It looked as though it wouldn't be too long before the Local lines were extended to a probable junction on the south side of Swan Street, but this junction wasn't made and we had to wait until the first four island platforms at the new Richmond station had been built. It was thus all of thirteen years before the new tracks could be taken through and connected into the system at Jolimont Junction as shown in Figure 12 (i). The feeling of euphoria on the morning of Monday 2 May 1960 when the train passed F140 without being stopped and after clearing the curve accelerated through the platform is well remembered.

Extending the Local lines separately to Jolimont Junction rendered the double crossovers at South Yarra unnecessary, and the box was abolished on Sunday 1 May 1960, although the building remained. The two emergency crossovers also remained and a third was provided, in the Local lines. These were now released by Annett keys kept in a hut near the former signal box. All three are now gone.

Acknowledgements and Apology

Thanks are due to Jack McLean for information supplied over a period of 35 years or so, and to those who compiled extracts from the Interlocking Register.

The writer regrets being uncertain about events at Punt Road, Richmond, during the period 1883 to 1887. It was stated that a junction and block post were established there in Oct 1883, but that the interlocked box was not opened until May 1884; also that the box was removed in November 1885 with the opening of the permanent Richmond box, but that some temporary arrangement would have been needed until March 1887 when Jolimont box was opened. Can some reader please explain exactly what happened?

VICTORIAN SIGNAL BOX TYPES

Andrew Waugh

It has been suggested that SRSV should produce a signalbox classification similar to the UK classifications. Such a classification broadly indicates the design of a box. This article describes a 'strawman' proposal for a Victorian classification.

The proposed classification has five main classes numbered from 0 to 4. Each main class indicates a major design variation. Major variants within each class are indicated by letters a, b, c, and so on.

Class 0

Class 0 is the 'odds and ends' class and contains the box designs of which fewer than 10 instances were built. The list of such designs includes the first Richmond Junction cabin, the Kensington style (2 examples), Footscray (1), Flinders Street (5), and the modern Burnley box.

Class 1

Class 1 is the timber hipped roof design with very narrow eaves and small windows. Examples were St Kilda, Newport South, and Newmarket.

Class 2

The Class 2 is the classic 19th century box; timber with gable roof, decorative barge boards, and six pane windows. Class 2a is the McKenzie and Holland version with the elaborate fretted barge board. Examples are Ballarat East, South End, and Moreland. Class 2b is the Victorian Railways version with the plainer barge board, wooden finial and cross bracing. Examples include Spotswood, Clifton Hill A, and Ballarat A Box.

Class 3

This is the replacement timber box used for most of this century with a hipped roof with very deep eaves. Class 3a is the version where the deep eaves was only provided on the front of the box producing a visored effect. Examples included Creswick and Glenorchy. Class 3b is the standard version, examples included Cressy, Sunshine and Wallan. Class 3c is the final post war version where only corner windows were provided, as at Somerton.

Class 4

Class 4 is the brick 'fireproof' signalboxes constructed for suburban resignalling. These also featured a hipped roof with deep eaves and verandahs. They differed in being built of brick, concrete, and steel. Class 4a is the original design with the roof with two angles. Examples were South Yarra and Brighton Beach. Class 4b is the standard design with the single angle roof, large windows, and external balcony. Examples include Yarraville and Coburg. Class 4c is the final brutal brick and concrete design with no aesthetic appeal; examples were Dandenong, Caulfield and South Kensington.

The purpose of this short article is to promote discussion. What do members think? Of course, after signalboxes we should look at signalbay design and relay rooms!

REMOTE CONTROL OPERATION OF MALDON JUNCTION

(Continued from March 1996)

Restoring Signal 51

Once a lever operating a power signal had been reversed, the Signalman could restore it to the 'Normal Indication' notch (i.e. nearly normal) at will to restore the signal to danger. However, the Signalman could not fully restore the lever to the normal position until two conditions have been met:

- The signal had returned to the stop position;
- The approach locking had released.

As described earlier, approach locking prevents the Signalman restoring a signal to danger in the face of an oncoming train and setting up an unsafe route before the train has been brought to a stand. A variety of method of releasing the approach locking are available. Castlemaine demonstrated two extremes: Signals 51 and AR had very limited provision for releasing the approach locking; while Signals AL and UAL had more flexible release facilities and were more typical of modern power operation.

Consider the control circuits for Signal 51 shown in figure 9 (reproduced in this issue). When the Signalman restored the lever to the Normal Indication notch, the feed to relay 51ZR was cut as the reverse band on lever 51 was opened. The dropping of 51ZR cut the feed to relay 51GR which, in turn, cut the feed to the two signal motors (a51G and b51G) on Post 51.

After some seconds both signal arms would have fallen to the 'Stop' position. Arm contacts on each arm made when both arms were between 0 and 5 degrees from the horizontal and this caused lever lock 51LM to lift through current flowing from BL, through the two arm contacts, a back contact of 51ZR and a band on the lever 51 circuit controller closed when the lever was in the normal indication position. The back contact of 51ZR was included to prove that this relay had not stuck in the up position.

Even though lock 51LM had lifted, the Signalman still could not restore the lever to the full normal position as it was still locked by lever lock 51M. The current to lift this lock was taken from the back contact of relay 51S (the stick relay for signal 51) and this contact was only closed when a train entered the single line section and dropped 51TR. But, as well as cutting the current to relay 51S, the dropping of 51TR would also prevent current from reaching lock 51M and so prevent lever 51 from being restored to normal. No current would reach 51M until the whole train had passed signal AR at the junction. Then current would pass from BL, through the track relays and the back contact of 51S, to energise 51M and permit lever 51 to be restored to normal.

Effectively, this meant that there was no release of the approach locking on signal 51. Once the lever had been reversed it could only be restored to the normal position after the signalled train had passed through the single line section. The only alternative, probably against the rules, was for an engine to run forward until it entered 51T, dropping 51S, and then reversing back

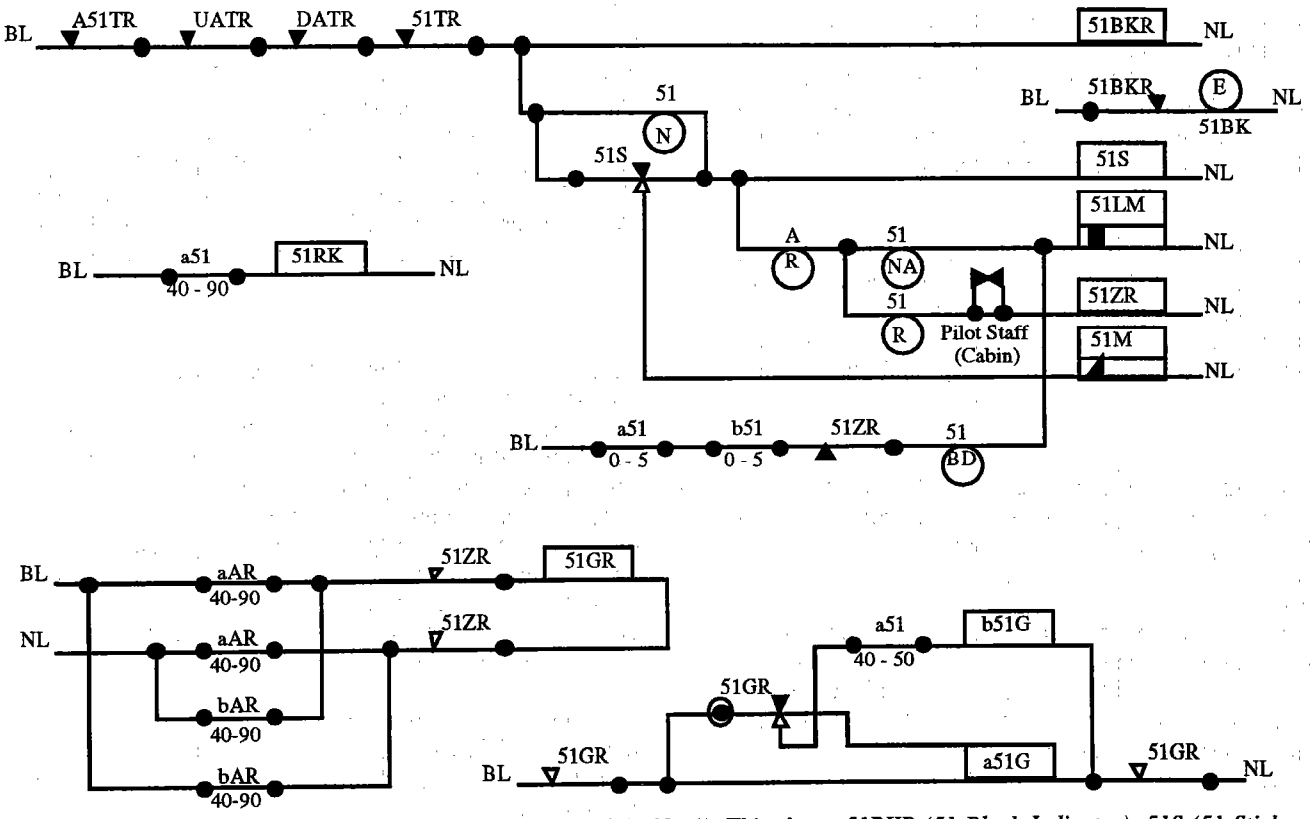

Figure 9: The circuits for Signal 51 (repeated from Vol 19 No 1). This shows 51BKR (51 Block Indicator), 51S (51 Stick Relay), 51LM (51 Front Lock), 51L (51 Back Lock), 51ZR, 51GR (51 Signal Relay), a51G (a arm Signal 51 Signal Mechanixm), and b51G (b arm Signal 51 Signal Mechanism)

into the station, clearing the single line section and picking up 51MI.

Restoring Signal AR

In a similar fashion to lever 51, lever A could, at any time, be restored from the 'R' position to the 'D' position. This cut the control to signal AR and restored it to danger. There was also no release from the approach locking until the train had actually passed Post 51.

The electric lock AM (figure 11) served to prevent lever A from being restored to the 'C' position from either the 'R' or 'L' position, and so this circuit implemented the approach locking for all three signals worked by lever A.

On the left of the figure can be seen the contacts that ensured signals AR, AL, and UAL were at Stop. The circuit also detected that the arms of the two Repeating signals (X and Y) were at Caution. The main circuit started at the Maryborough line Repeating signal, X, and ran back to Maldon Junction. A separate circuit started at the Maldon line Repeating signal (Y) and also ran back to the junction where the two indications were combined by relay UALGP (UAL Signal Repeating Relay).

If all the signal arms are at their most restrictive aspect (Stop or Caution), lever A is in the 'D' position, *and lever 51 is fully normal*, then current flowed through lock AM and allowing lever A to be restored to the 'C' position. The catch, of course, was the requirement that Lever 51 be fully normal. As described in the previous section Lever 51 could only be restored to the fully normal position if the complete train had passed signal AR. In short, once Lever 51 had been reversed, the approach locking on lever A could not be released until the Down train had cleared the single line section and completely passed signal AR.

At the same time that lock AM lifted, indicator AK was be energised, to change the top left shutter on the table interlocker from 'Lever Locked' to 'Lever Free'.

Restoring Signals AL or UAL

Lock AM was also used to prevent the Signalman restoring lever A to the 'C' position from the L position. In contrast to the restricted releases of the approach locking on signals 51 and AR, flexible approach locking was provided for signals AL and UAL. The circuit is also shown in figure 11.

The Signalman would have normally restored lever 'A' to the 'C' position after the Up train had passed signals AL or UAL and was proceeding into Castlemaine. Under these circumstances, lock AM would lift when current flowed from BL through the normal arm contacts on the Up signals, a back contact on BTSP, the normal band on lever 51, and through the coils of AM. BTSP (B Track Stick Repeat Relay) dropped when the signalled train passed AL or UAL (see figure 8). BTSP remained down until lever 'A' had been restored to the 'C' position.

Circuitry was also provided to allow lever 'A' to be restored before the signalled train had passed AL or UAL. This was to allow the Signalman to alter the priority of two trains at the junction.

The first step was for the Signalman to move the lever from the full 'L' position. This broke down the current to the signal motors and the arms fell back to their most restrictive aspect. Note that as soon as the arm on AL or UAL fell below 40 degrees, relays XDR or YDR also felll, cutting current to the signal mechanisms XG or YG (see figure 10).

Once all the Up signals were at their normal position, Lock AM lifted immediately provided there was no Up train approaching Maldon Junction or standing at signals AL or UAL. Current flowed from BL through the arm contacts, the AB band of lever A, the front contacts of ALAR (AL Approach Relay) and UALAR (UAL Approach Relay), the N band of lever 51, to Lock AL. The Approach Relays (see figure 8) simply repeated the track relays on the approach side of signals AL and UAL. ALAR was up provided no train was on track circuit XT (between signals AL and X) or track circuit AXT (approaching signal X). UALAR provided similar protection for the Maldon line.

This took care of restoring lever 'A' when there were no Up trains approaching Maldon Junction. But what if a train was approaching from the uncleared route and the Signalman wanted to change the route to give the train precedence? For example the Signalman might have set up the route for an Up Maryborough train If this train was then delayed, and the Maldon train arrived at UAL the previous approach locking release would not be effective as UALAR would be down.

To allow restoration under these circumstances, it is necessary to note that approach locking is only intended to hold the route for the train that has actually been signalled. In the case where the route had been set for the Maryborough line, the Driver of the train on the Maldon line would pass signal Y at Medium Speed Warning and would be slowing to stop at UAL. There was no point in holding the route in these

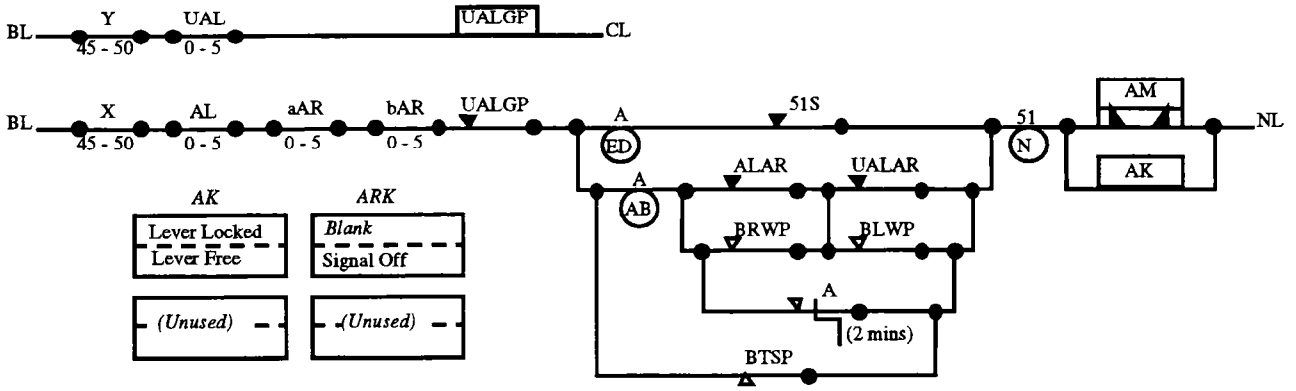

Figure 11. Approach Locking Circuits for Signals AL, UAL, and AR together with Indicator screens for Lever A. This shows the circuits for UALGP (Signal UAL Signal Repeat Relay), AM (Lever A Lock) and AK (Lever A Lock Indicator).

circumstances even though UALAR is down. The front contact of UALAR in figure 11 is therefore bridged out by a front contact of BLWP (B Left Points Repeating Relay). This relay is only up (see figure 5) if Points B are set and locked for the Maryborough line (which meant that UAL must have been at stop before lever A had been moved from the 'L' position).

The front contact of ALAR was similarly bridged around by a front contact of BRWP (B Reverse Point Repeating Relay) to release the approach locking when the route had been set for the Maldon line and it had been decided to give precedence to a Maryborough line train.

Finally, what if the Signalman decided to change the route after the signalled train has entered the approach track circuits? The Signalman could restore 'A' to the 'C' position, but only after a time delay. As can be seen in figure 11, both the ALAR and UALAR contacts were bridged around by a front contact on the A time release. This contact would be closed after a two minute delay. By this time, the Driver of the train would have either noticed that the signals had been restored to danger and stopped the train at the Up home signal or passed the Up home signal. In the later case, occupancy of ABT or BT would directly track lock Points B (and, incidentally, release the approach locking).

It is important that the time release was reset after being used; otherwise the approach locking could be made ineffective. To ensure that the time release contact was down, a back contact for the time release was inserted in the signal control circuits for AL, UAL and AR (see figures 8 and 10). Unless this back contact is made, none of the signal relays (ALGR, UALGR, aARGR, or bARGR) can be energised and all these signals will be held at stop.

The end

The remote control operation of Maldon Junction remained in service until 4 March 1952. The passenger service to Maldon had been replaced by a co-ordinated road motor service early in World War 2. Subsequently, the only regular train was the weekly goods to Shelbourne. There was consequently little need for such a sophisticated system of signalling at Maldon Junction. Resignalling the junction, however, would cost money so there was no incentive to remove the remote control signalling until it was necessary. By 1952, it was possible that renewals were necessary. Alternatively, it might have been desired to use some of the equipment somewhere else.

After removal of the remote control equipment, the points at Maldon Junction was secured by a Miniature Staff lock and an Intermediate Electric Staff placed in the Castlemaine - Guildford staff section. All the Power signals, inluding Post 51 at Castlemaine, were removed and a single mechanical Up home signal provided from the Maldon line. The Maldon line officially closed on the 3 December 1976, though the last train had run on the 17 June.

PRESERVED VICTORIAN SIGNALLING EQUIPMENT

It has been suggestted that the Society should compile a list of preserved Victorian signalling equipment. This will allow research and displays to be mounted more easily. The Secretary, Glenn Cummings, has agreed to co-ordinate the compilition of this list. If any member has any preserved Victorian equipment could they contact Glenn, whose address appears inside the front cover.

SIGNALLING ALTERATIONS

(Continued from Page 44)

(26.03.1996) **Maryborough**

When a 'Low Speed Caution' indication is displayed on Dwarfs 14, 15, and 18 the speed restriction will only apply until the train has cleared the points. Rule 13g, Section 2, Book of Rules, is modified accordingly.

Amend Procedure 38, Section 34, Book of Rules. (SW 164/96, WN 12/96)

(26.03.1996) **Elmore**

The following alterations have taken place:

1. The Annett Lock on the Up end points leading to No 3 Road has been replaced by a Large type Master Key Lock. Note that it will not be necessary for the Down Home Signal to be restored to Stop for the Up end Master Key locked points to be operated
2. The A pattern Annett Key has been removed from the Closing Lever
3. The Annett Lock on the Down Home Signal quadrant at Points G has been replaced with a V5PSW padlock and locking pin.
4. A Large Master Key lock has been provided on the Down end hand points leading from No 2 to No 3 Roads

Amend Diagram 4/89. (SW 160/96, WN 12/96)

LIMITATIONS ON ABSOLUTE OCCUPATION

Graeme Reynolds

Government railway practice in Victoria has acknowledged that in some circumstances essential railway works to the track and adjacent area would be best effected without the disruption by regular traffic passing through the site.

From 1864 until 1898 occupation was couched only in terms of advising employees to avoid trains or not to remove rails within fifteen minutes of the expected passage of a train unless there was some immediate danger. From *Regulations for employes* in 1898 the restriction on blocking a line was eased to be 'not less than ten minutes before a train is due'. Sometime between the publication of the editions of the *General Appendix* in 1908 and 1913, occupation was defined as 'between trains' or 'absolute'. The new definition not only re-phrased the earlier practice but also introduced the concept of an occupation without traffic. In this type of occupation, the meaning was no less than the general linguistic meaning - free from limitation or condition, thorough and complete.

From about 1913 the expectation was that the Way and Works Branch and in time the Electrical Engineering Branch would advise the Transportation Branch of the necessity for such occupation. The last named Branch issued the traditional notices. Despite many changes in the official titles the procedure remains.

Publication of some recent notices for Absolute Occupation highlights a change in the nature of this occupation. There is no longer an implicit prohibition on traffic passing through the occupied site.

In two instances the notice of advice stated that :-

> Permission has been granted for train No. ... on [day and date] - to be accompanied by the Supervisor in Charge through the area under Absolute Occupation. The Supervisor in Charge must show the Absolute Occupation permission to the Driver of the train concerned prior to the train entering the section of line under absolute occupation.

Although the reasoning behind this development is not explicit, it might reflect a response to market forces for maintaining the best transit times and the need to guarantee a delivery time for freight.

In a third instance of this modified style of occupation, there is a lucid example of a traditional model of train working. In this notice, providing the Supervisor in Charge held the Absolute Occupation for the section and is in attendance, the designated train was 'to be piloted through the section'. The term 'pilot' in Victorian practice was consistent with the marine use - guiding in the sense of through a degree of hazard. In safeworking the emergency working was called Pilotman working. Thus, the Pilotman became the authority for the section. In traffic terms 'pilot' was also used to denote either an engine used to guide a load beyond the capacity of the other engine or even a shunting engine.

Not only has this third instance of occupation raised aspects of the traditional methods but it has reinforced their terminology. The Supervisor in association with the Absolute Occupation order was to act as the authority for travel. His need to travel with the train was akin to pilotman practice. In the present emergency operating procedures the Driver need only have a valid Train Authority Working document and clearance from Train Control for the train to enter the section. The blank form of the document, which is held in multiple by the Driver, is completed by the signaller and handed to the Driver.

These occurrences are not only important for the reversion to piloting model but more so for the new and unexplained definition of the occupation. An order for Absolute Occupation derives its authority from the knowledge that the section is clear of traffic and that no other train or vehicles, other than those directly associated with the needs of the occupation, will be allowed to enter the section. The Order does no more than block a section. It is not a suspension of an existing safeworking system, or a prelude to the introduction of another system. However, these three instances reveal that the unconditional nature of the Order may be subject to individual review to meet some traffic needs. It is probably a gross exaggeration to construe an Absolute Occupation order as a form of Train Authority Working. In any event, the clarity of the absolute nature of the Order has been blurred.

In safeworking the term 'absolute' had a meaning consistent with the general community understanding of the word. Should the Absolute Occupation order lose its unconditional nature, either by the frequency of times each notice requires modification or by a change to the *Book of Rules and Operating Procedures*, the interest in plain English text may leave some scope for the revision of the term 'absolute' and the introduction of a new term.

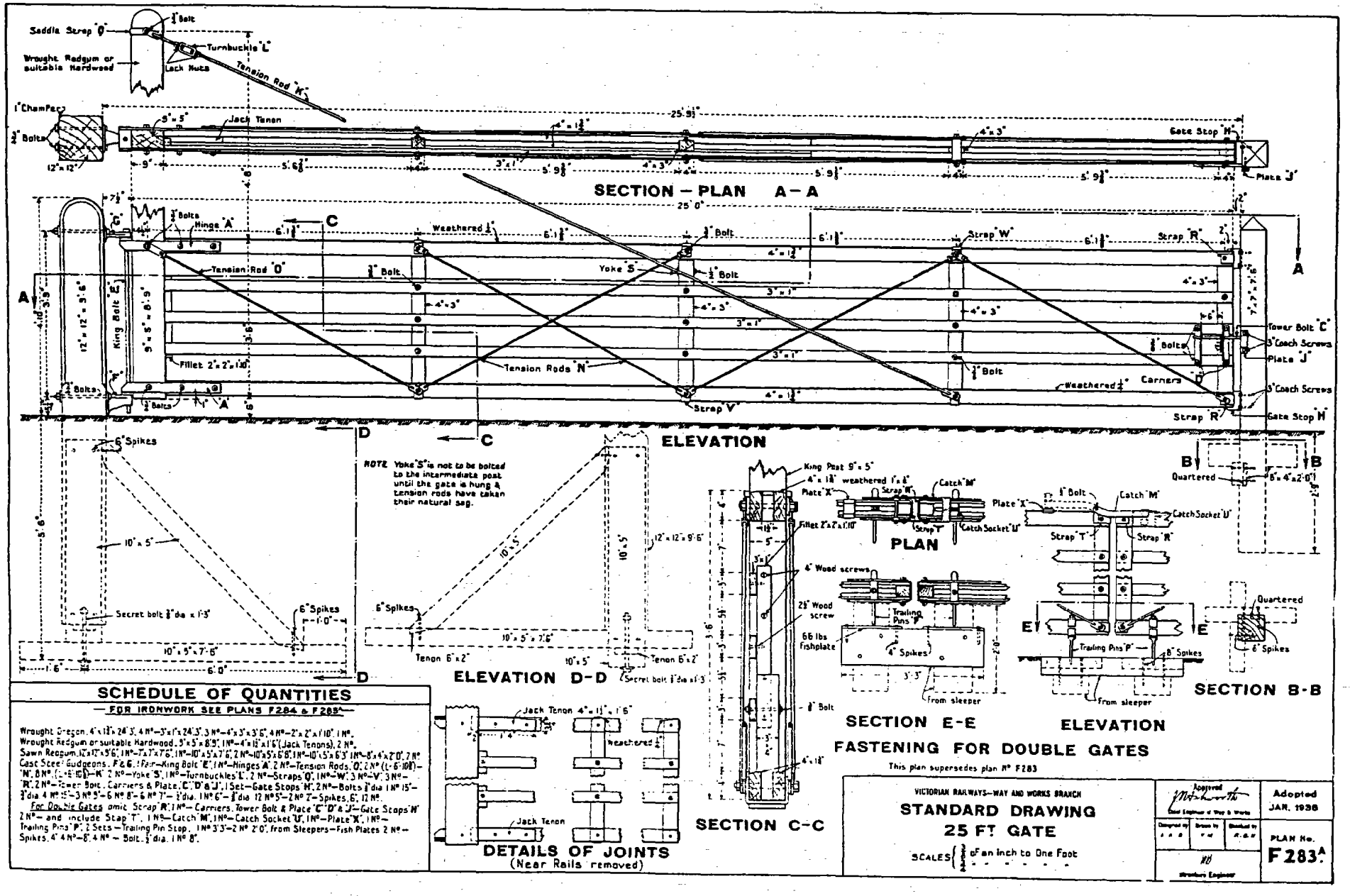

SCHEDULE OF QUANTITIES

— FOR IRONWORK SEE PLANS F284 & F285 —

Wrought Oregon, 4"x12"x24'3", 4 No — 3"x1"x24'3", 3 No — 4"x3"x3'6", 4 No — 2"x2"x1'10", 1 No.
Wrought Redgum or suitable Hardwood, 5"x5"x8'9", 1 No — 4"x12"x1'6" (Jack Tenons), 2 No.
Sawn Redgum, 12"x12"x5'6", 1 No — 7"x7"x7'6", 1 No — 10"x5"x7'6", 2 No — 10"x5"x6'8", 1 No — 10"x5"x6'3", 1 No — 8"x4"x2'0", 2 No
Cast Steel Gudgeons, F & G, 1 Pair — King Bolt "E", 1 No — Hinges "A", 2 No — Tension Rods "O", 2 No (L-6'10") — "N", 8 No (L-4'10") — "K", 2 No — Yoke "S", 1 No — Turnbuckles "L", 2 No — Straps "Q", 1 No — "W", 3 No — "V", 3 No — "R", 2 No — Tower Bolt, Carriers & Plate, "C", "D" & "J", 1 Set — Gate Stops "H", 2 No — Bolts ¾" dia 1 No 15" — ¾" dia 4 No 15" — 3 No 9" — 6 No 8" — 6 No 7" — ½" dia. 1 No 6" — ½" dia 12 No 5" — 2 No 7" — Spikes, 6", 12 No.

For Double Gates omit Strap "R", 1 No — Carriers, Tower Bolt & Plate "C", "D" & "J" — Gate Stops "H" 2 No — and include Strap "T", 1 No — Catch "M", 1 No — Catch Socket "U", 1 No — Plate "X", 1 No — Trailing Pins "P", 2 Sets — Trailing Pin Strap, 1 No 3'3" — 2 No 2'0", from Sleepers — Fish Plates 2 No — Spikes, 4" 4 No — 8", 4 No — Bolt, ½" dia. 1 No 8".

VICTORIAN RAILWAYS—WAY AND WORKS BRANCH

STANDARD DRAWING

25 FT GATE

SCALES { ¼" of an inch to One Foot

Approved — Chief Engineer of Way & Works

Adopted JAN. 1938

Designed by — Drawn by — Checked by

Structural Engineer

PLAN No. **F283A**