SOMERSAULT
1995

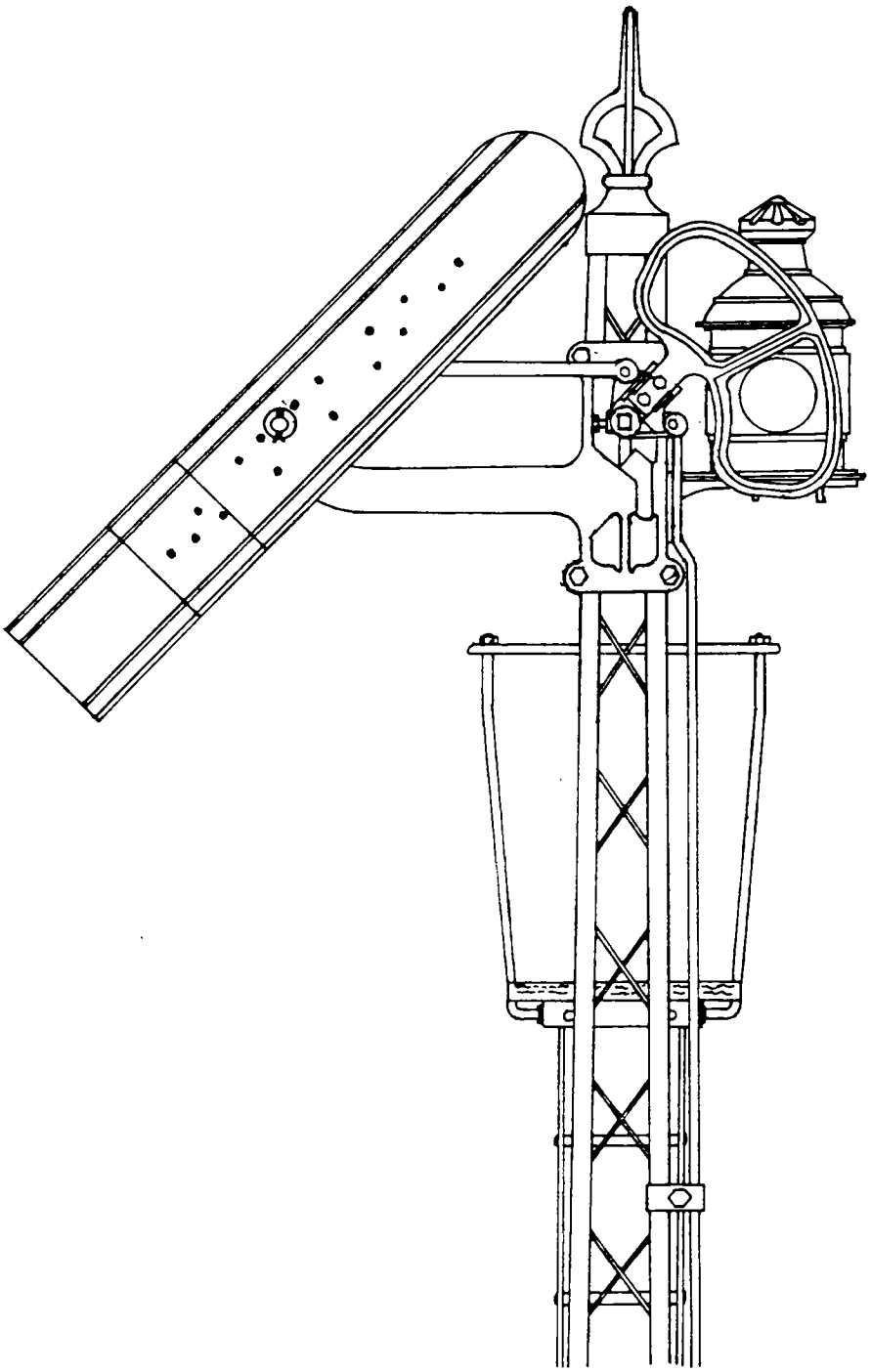

SIGNALLING RECORD SOCIETY VICTORIA (INC)

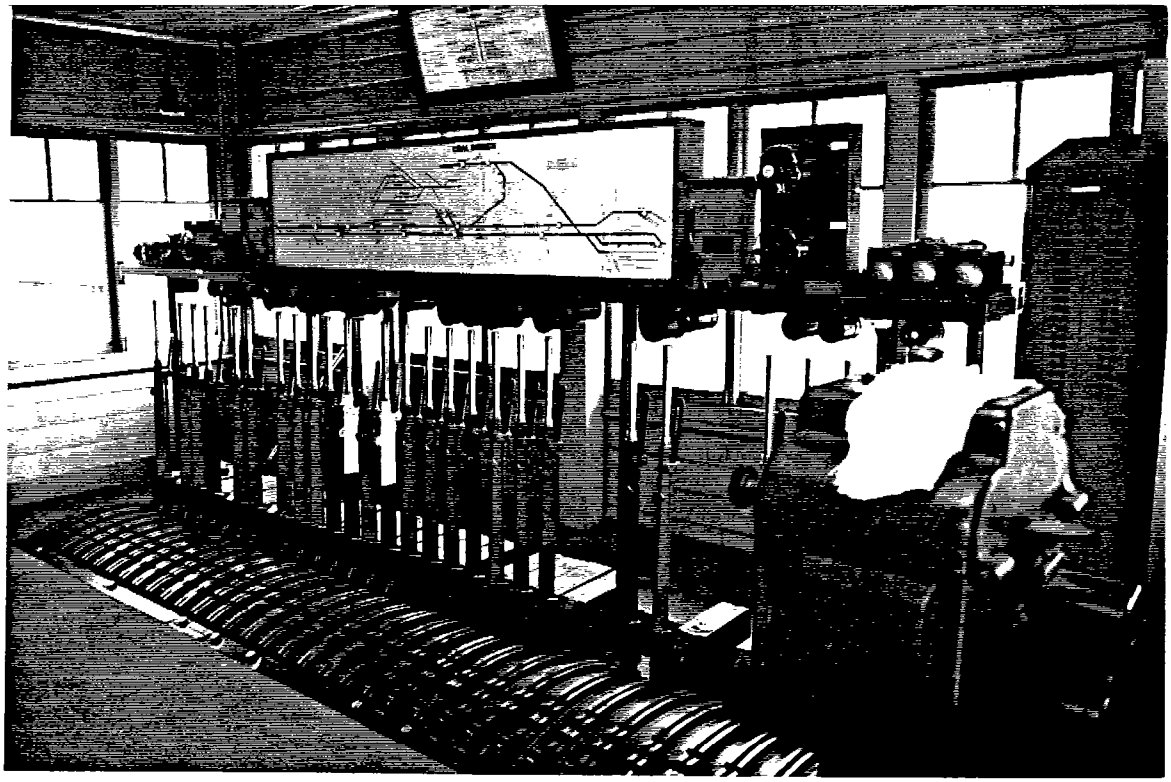

The 1996 Showday tour visited signalling locations in Albury/Wodonga on 7 November. This is the interior of Wodonga Coal Sidings Box (Victoria). The frame was installed in the box on 21 September 1941 and was brought into regular use on 22 March 1942. The box was extensively re-equipped in 1962 in conjunction with the extension of the standard gauge to Melbourne.

CONTENTS

SOMERSAULT

February 1995
Vol 18, No 1

SIGNALLING RECORD SOCIETY OF VICTORIA INC

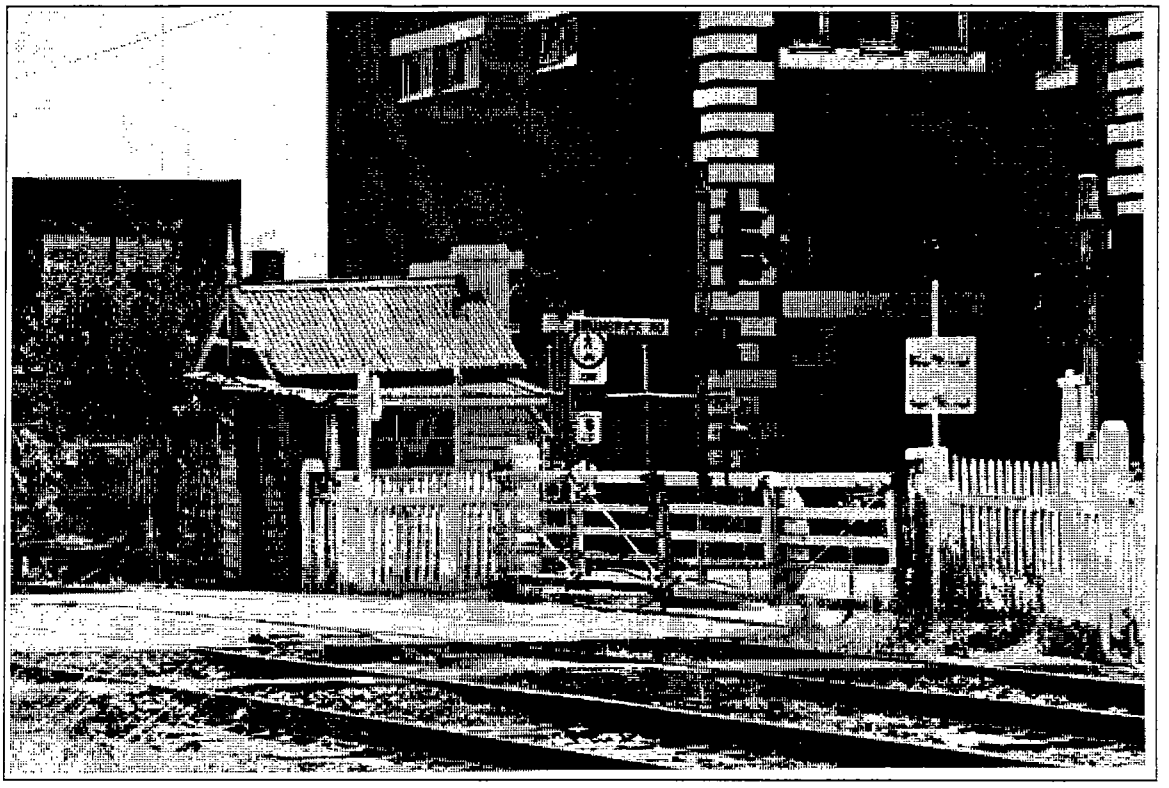

There have been hand operated gates at Brunswick Road, Jewell, continuously from the opening of the Coburg line in September 1884. The small gatecabin is probably nearly as old, though the construction date is not known. Tenders were called for 13 'gate cottages' on the Coburg line in February 1884, but this term usually refers to the larger Departmental Residences, not the small cabins. Identical cabins were probably provided at all the hand operated gates on the Coburg line and survive today at Park Street, Brunswick Road, Barkly Street, Albert Street, and Tinning Street. Most cabins have gained a small lean to shelter to protect the four lever non-interlocked ground frame which works the wickets and protecting mechanical signals. At Brunswick Road, one lever of this frame is now spare as the former Up Home signal was replaced by a controlled automatic signal in 1971. The warning bells, warning of approaching trains, are mounted on the front wall of the cabin. The bell warning of Down trains is operated automatically by a track circuit, but the warning of Up trains is given manually by the Signaller at Jewell. The gates themselves are to a standard Way and Works Branch design and were not just used at level crossings. Examples could be found closing the road approaches to stations. No interlocking is provided between the level crossing gates and the signals protecting the level crossing. One of the rotating red lights can be seen on the right. This is considered to be a traffic light by the police, and drivers running cars into the gates are charged with driving through a red light. *Photo: Andrew Waugh*

SOCIETY CONTACT INFORMATION:

EDITOR: Andrew Waugh, c/o CSIRO, 723 Swanston St, Carlton, 3053.
Phone (03) 457 3795 (AH), (03) 282 2615 (BH) Fax (03) 282 2600

MANAGING EDITOR: David Langley, P.O. Box 8, Avenel, 3664,
Phone (057) 96 2337 (AH), (057) 92 3288 (BH)

PRESIDENT: Alan Jungwirth,
29 Clements St, East Bentleigh, 3165, Phone (03) 563 7287 (AH)

SECRETARY: Glenn Cumming, 19 Peace St, Glen Iris, 3146.
Phone (03) 885 8546 (AH), (03) 623 3611 (BH),
Fax (03) 623 2911, urgent messages only please.

MEMBERSHIP OFFICER: Colin Rutledge,
P.O. Box 103, Seymour, 3660, Phone: (057) 99-1277.

NSW GROUP LEADER: Neil Curryer,
20 Cooksey Close, Waratah West, 2298, Phone: (049) 67 6960

NSW GROUP SECRETARY: Bob Taaffe,
21 Western Crescent, Westleigh, 2120, Phone: (02) 481 9994.

Deadline for September 1994 issue is 24 July

MINUTES OF MEETING HELD FRIDAY NOVEMBER 18, 1994

(AT 60 KENMARE STREET, BOX HILL NORTH.)

Present:- A.Jungwirth, W.Brook, J.Churchward, G.Cumming, A.Gostling, M.Guiney, W.Johnston, K.Lambert, D.Langley, J.McLean, G.O'Flynn, P.Silva, R.Smith, A.Waugh & R.Whitehead.

Apologies:- W.McSween, R.Murray, G.Reynolds & C.Rutledge.

The President, Mr. Alan Jungwirth, took the chair and opened the meeting @ 2014 hrs.

The President welcomed visitors Andrew Pardy & Bill McKerrecher to the meeting.

Minutes of the September Meeting:- Accepted as published. A.Waugh/D.Langley.

Matters Arising:- Nil.

Correspondence:- A telephone call from the U.K. has clarified the situation on publication of material from "Somersault" by the S.R.S.U.K.

G.Cumming/R.Smith.

General Business:- The Secretary reported on the successful signal box tour held on Melbourne Cup Day.

Bob Whitehead reported on progress with the archives. Possession of the rooms at Seymour has taken place and renovations have commenced. An open day is to take place on Saturday 3 December, 1994 & all are welcome. A letter is to be sent to the keeper of public records for recognition as a repository of temporary sentenced records. A mission statement is to be prepared for the archives. Advice is being sought from other museums on the keeping of records.

The meeting was advised that the current treasurer, Colin Rutledge, will not be seeking re - election at the Annual General Meeting in March 1995.

Greg O'Flynn noted that tenders for the re - signalling at Warrenheip had been called. The panel is expected to be located in the office at Ballarat & to be complete by April 1995.

Greg O'Flynn reported on interstate trains running via Pinnaroo as a trial for the closure of the Western line for conversion to standard gauge. The future of the Mount Gambier line is not known at this stage.

Andrew Waugh advised that the platform televisions for driver only operation were now in service at West Richmond, Westgarth & Heyington. Large mirrors had been provided on platforms at Flinders Street.

Andrew Waugh reported that Wallan Signal Box is soon to be closed in favour of levers in the station office using the frame from Craigieburn. A similar project is to take place at Woodend with levers on the platform, possibly using the frame from Macedon.

Peter Silva advised that the up and down arrival bracket home signals at Eltham had been converted to light signals.

Bill Johnston described a signal post at Newport with 2, 2 - position light signals, 1 above the other. Signs are provided for each signal unit.

David Langley noted that a 3 - position signal post at Newport had a fixed "A" light, the "B" light applied to broad gauge movements and & the "C" light applied to standard gauge movements.

Roderick Smith reported that Yarraville is now a fringe box to Metrol and that design work was taking place for increased line speeds from South Kensington to Laverton.

Alan Jungwirth described the new white lights at Flinders Street. the lights are used by the platform staff to give the "tip" to go to trains in the platform.

Keith Lambert advised that the new signalling at Caulfield is to be commissioned in March 1995 using the old Flinders Street "B" panel in Caulfield Signal Box. Keith also advised that the new signalling at Dandenong is due to be commissioned in February 1995.

Roderick Smith reported on the suspension of services between Sale & Bairnsdale.

Jack McLean spoke about the withdrawal from service of all remaining mechanical staff exchangers.

Glenn Cumming described the new dual gauge turnouts at Brooklyn and noted that they were purchased from AN.

Alan Jungwirth spoke about the commencement of daylight XPT services between Melbourne & Sydney.

Bob Whitehead reported that on a recent visit to Timboon, the goods shed was intact and in use as the local Guides Hall.

Syllabus Item:- The Chairman introduced member Jack McLean who presented a slide and audio tape show titled "In The Signal Box" featuring a collection of antique slides.

This was then followed by Roderick B. Smith who presented the annual screening of slides from the collection of the late Stephen McLean.

At the conclusion of the Syllabus Item, the Chairman thanked Jack & Roderick for the entertainment and this was followed by acclamation from those present.

The Chairman then thanked Ena & Jack McLean for the kind use of their house for the meeting.

Meeting closed @ 2139 hrs.

Next meeting:- Friday February 17, 1994 at the Uniting Church, Hotham St, Mont Albert commencing @2000.

SIGNALLING ALTERATIONS

The following alterations were published in WN 39/94 to WN 48/94. The alterations have been edited to conserve space. Dates in parenthesis are the dates of the Weekly Notice.

08.10.1994 **Spencer Street**

On Saturday 8.10.84 and Sunday 9.10.94 the following signalling alterations took place:

1. Crossovers 628 and 652 were abolished.
2. Dwarf 752 (East Yard to Up Main Goods) was abolished.

Amend Diagram 24/85. (SW 283/94, WN 39/94)

14.10.1994 **Newport**

Between Friday 14.10.94 and Saturday 22.10.94 the Standard Gauge Link at Newport between the East Line and the Standard Gauge Works Siding (towards Geelong) via No 3 Siding was commissioned. The following alterations took place:

1. The old Stabling Sidings Nos 1 and 2 were abolished and Points 45 removed.
2. The new Stabling Siding No 2 (the old West Line) was commissioned. Dwarf 50, applying from this siding, was also commissioned. A temporary hand operated Hayes derail has been provided in Stabling Siding No 2 pending provision of a motor operated derail. This derail is normally locked "off" and it will not be necessary to place the derail "on" unless a train is stabled in the siding without a Driver.
3. The portion of line between the junction of the East and West Lines to Brooklyn, along No 3 track, to the Up end of Crossover 145 became dual gauge track.

4. The Broad Gauge route from No 2 Track to Brooklyn will not be available until further notice. Home Signal 60 will display normal speed aspects for the Suburban Line and low speed aspects for the stabling sidings.
5. The connection between No 2 Track with the Goods Line and Sidings A and B (formed by Points 141, 145, and 149) has been removed.
6. Medium Speed aspects will only be displayed on Down Home Signal 144 for Broad Gauge movements. Low speed aspects will only be displayed on this post for Standard Gauge movements. Boards lettered "Broad Gauge" and "Standard Gauge" were provided on the "b" and "c" arms of this post (respectively). Low speed aspects will only be displayed when Catch Points 145 are reversed.
7. Sidings A and B were abolished. The former Siding B became the Standard Gauge works siding. Dwarf 146 applies for movements from this siding to the Dual Gauge track and is interlocked with Catch Points 145.
8. Until further notice, Home Signals 30, 38, 42, 58 and 148 will display "low speed" aspects only.

Amend Diagram 21/86. (SW 292/94, WN 40/94)

09.10.1994 **Tottenham**

On Sunday 9.10.94, Home Signal Post 2G was relocated 300 metres in the Up direction. Amend Diagram 15/94. (SW 290/94, WN 40/94)

10.10.1994 **West Tower**

On Monday 10.10.94, Bridging Points 127 and Dwarf 118 (No 2 Icing Track) were removed from service. Amend 24/85. (WN 291/94, WN 40/94)

12.10.1994 **Ouyen**

On Wednesday 12.10.94, hand points 'E' (No 2 Road) were rodded to Plunger Locked Points 'A' (No 1 Road). Amend Diagram 6/91. (SW 295/94, WN 40/90)

27.10.1994 **Newport**

On Thursday, 27.10.94, Catch Points 145 and Dwarf 146 (both within the Standard Gauge works line) were commissioned. Amend Diagram 21/86. (SW 313/94, WN 42/94)

28.10.1994 **West Tower**

On Friday 28.10.94, No 2 Icing Track was abolished. Dwarf 118 was abolished and Points 125D and 129U were secured reverse. Amend Diagram 14/89. (SW 314/94, WN 42/94)

(01.11.1994) **Tottenham - Brooklyn - Newport**

Whenever it is necessary for a Standard Gauge movement to be conducted over the Dual Gauge Line between Tottenham Loop - Brooklyn - Newport, the following procedures must be observed until fixed signals are commissioned.

Tottenham Loop - Brooklyn Standard Gauge Movement

1. The Supervisor in charge must make application to the Train Controller, Centrol, for Absolute Occupation of the single line section West Footscray Junction - McIntyre Loop (between signals WFJ 6 to MCT 4/U4)
2. Once the Absolute Occupation Order has been received and repeated back correctly, the Supervisor will inform the Operations Officer who will be responsible for co-ordinating all operational activities of the Works train.
3. The Operations Officer must obtain permission from the Signaller at Newport before permitting the Standard Gauge works train to leave Tottenham.
4. The Signaller at Newport must contact the Standard Gauge Works Site Supervisor and ensure he will be in attendance to meet the works train at Post No 144 before giving permission to the Operations Officer for the Standard Gauge works train to leave Tottenham.
5. The Operations Officer must then inform the Signaller at Tottenham
6. The Signaller at Tottenham B Box must then sleeve levers 2, 3, 10, 11, 13, and 14 normal; obtain an Electric Staff for the section Tottenham "B" - Brooklyn; and complete a Train Authority on the prescribed form as the authority for the Driver of the works train to cross the Up and Down Independent Goods Lines. The Electric Staff and the Train Authority must be handed to the Operations Officer.
7. The Operations Officer must then inform the Supervisor in Charge. The Points may then be unclipped and reversed for the movement. The Points must be secured prior to any train movement.
8. Once the Points have been reversed and secured, the Operations Officer will hand the Electric Staff and the Train Authority to the Driver of the Works train.
9. When the Works Train is in clear behind Post 8G, the Operations Officer must arrange for the Points to be returned to the normal position and secured for the Main Line. The Absolute Occupation may be returned to the Train Controller, Centrol, if necessary.
10. When the Works Train arrives at Brooklyn, the Driver must hand up both the Electric Staff and Train Authority to the Signaller. Provided the train has arrived complete and is in clear, the Signaller must give the "Train Arrival" bell signal. The Train Authority must then be cancelled and the Signaller, Tottenham "B", informed.

The train will then be worked through to Newport in the normal manner. The Fixed Signals which currently apply to the East Line will also apply to Standard Gauge movements. The Signaller, Newport, must not place Home 144 to proceed unless the Standard Gauge Works Supervisor is in attendance at the Signal to meet the works train.

Brooklyn - Tottenham Loop Standard Gauge Movement

1. The Signaller, Brooklyn, will obtain an Electric Staff in the normal manner for the section Tottenham "B" - Brooklyn.
2. The Supervisor in charge must then obtain Absolute Occupation as for clause 2 above. This will not be necessary if Absolute Occupation has already been taken out. The Signaller, Tottenham "B", must then be informed.
3. The Signaller, Tottenham "B", must sleeve levers and complete a Train Authority form as described in clause 6 above.
4. The Operations Officer will then inform the Supervisor in Charge and arrange for the applicable Points to be unclipped and reversed.
5. All Standard Gauge works trains approaching Tottenham are to stop at Post 8G. The Operations Officer must hand to the Driver of the Works Train the Train Authority as authority to pass Signal Post 8G and proceed to the Standard Gauge line.
6. The Absolute Occupation Order is not to be returned until the Works Train has cleared the single line section West Footscray - McIntyre Loop, and all applicable Points have been restored to the normal position and secured for the Standard Gauge Main Line. The Driver must cancel the Train Authority upon being advised that the Works Train is clear of the Points leading off the Standard Gauge.

Newport Standard Gauge Loop (Works Siding)

The Signaller at Newport must ensure that Catch Points 145 are reverse before placing lever 144 reverse for movements into the Standard Gauge Loop. Signal 144 will display Low Speed Caution for Standard Gauge movements and Medium Speed aspects for Broad Gauge moves.

Works Trains from Anzac Siding to Works Siding

Before any train is permitted to enter the Dual Gauge line from the Anzac Siding to proceed to the Works Siding, the Signaller at Newport must ensure that the Standard Gauge Works site Supervisor will be in attendance at Post 144 to meet the works train. (SW 272/94, WN 41/94)

(01.11.1994) **Bendigo - Eaglehawk - Inglewood**

When traffic permits, a return Train Order may be issued from Bendigo through Eaglehawk to the secondary corridor. The competent employee at Eaglehawk must remain in attendance at the junction during the period that the return Train Order is effective.

Insert on page 35-8 of the 1994 Book of Rules. (SW 297/94, WN 41/94)

02.11.1994 **Seymour Loop**

On Wednesday, 2.11.94, the turnout to the Up end Cripple Road will be spiked for No 2 Road and will be subsequently removed. This is part of the work to extend the Standard Gauge loop. (WN 41/94)

04.11.1994 **Newport Workshops No 1 Signal Box**

On Friday 4.11.94, the Home signal on Post 56 (controlled by lever 1) was abolished. Amend Diagram 21/86 and page 46, Book of Signals. (SW 321/94, WN 43/94)

05.11.1994 **Wodonga Coal Sidings - Albury South**

On Saturday 5.11.94 and Sunday 6.11.94 the Dual Gauge line over the Murray River bridge was abolished and the Standard Gauge line returned to its original alignment. Posts 3, 14, 49, and 57 were returned to service. Home 2 was converted back to a Controlled Automatic and renumbered E.9973. An illuminated letter 'A' was refitted to Post 8. Pilot levers 3 and 7 at Coal Sidings, 122 at Wodonga 'A' and 3, 14, 49, and 57 at Albury South were returned to their original use. The additional interlocking between the Down Home Departure Signals 2 and 13 and the Up Home Departure Signals 120 and 122 was removed. (SW 327/94, WN 43/94)

11.11.1994 **West Tower**

On Friday 11.11.94, Nos 5 and 6 Arrival Roads were commissioned. Points 191 were spiked normal. (SW 338/94, WN 44/94)

12.11.1994 **Dandenong**

On Saturday 12.11.94, Post 74 was relocated 5 metres further out. Train stops were installed at Posts 48 and 79 but not brought into use. Amend Diagram 29/90. (SW 339/94, WN 44/94)

13.11.1994 **Metrol**

On Sunday 13.11.94, the light unit on Dwarf 532 was lowered 1 metre. A hood and louvres will be fitted to improve sighting of the signal. (SW 337/94, WN 44/94)

13.11.1994 **Eltham**

On Sunday 13.11.94, the following alterations took place:

1. Post 2 was relocated 20 metres in the Up direction. The two Down Home signals on this post (4 and 5) were converted to two position light signals. These signals track cancel with the passage of a train and will not reclear until the controlling lever has been restored to normal and reversed again. The disc signal on Post 2 (Disc 6) was converted to a two position (light) Dwarf signal (as described in section 2.8, rule 7, clause b, of the Book of Rules. A train stop was provided at Post 2.
2. Post 11 was relocated 76 metres in the Down direction. The two Up Home signals on this post (32 and 33) were converted to two position light signals. These signals track cancel with the passage of a train and will not reclear until the controlling lever has been restored to normal and reversed again. The disc signal on Post 11 (Disc 31) was converted to a two position (light) Dwarf signal. Signals 31, 32, and 33 were interlocked with the Boom Barriers at Diamond Street. A 60 second delay will occur if the signal lever is restored to normal with an Up train on the approach track. A train stop was provided at Post 11.
3. The Up Distant (35) on Post 12 was slotted and returns to normal when Home 32 is cancelled by the passage of a train.

Amend Diagram 25/90 and page 76, Book of Signals. (SW 332/92, WN 44/94)

18.11.1994 **Cranbourne**

On Friday 18.11.94 the following alterations took effect:

1. Home Signals A and D and Starting Signals E and F were abolished.
2. The push buttons provided to control the flashing lights at the South Gippsland Highway and at Camms Road were abolished. The level crossing protection equipment at both crossings will still operate automatically on the approach of a train.
3. The Train Order sections ABB Siding - Cranbourne - Lang Lang were replaced by the section ABB Siding - Lang Lang. The End of Train Detection Equipment located 100 metres on the Down side of the South Gippsland Highway has been retained. Follow on movements may continue to be permitted towards Cranbourne provided the previous train has received a "Train Complete" message.

Amend page 100, MTP and page 269, Book of Signals (SW 348/94, WN 45/94)

19.11.1994 **North Geelong "C"**

On Saturday 19.11.94 and Sunday 20.11.94, the lead from the Through Siding across the Ballarat Main Line to the Fyansford line was removed, together with the electrically released auxiliary ground frame working the lead. A new crossover, facing for Down trains, was provided between the Ballarat Main Line and the Fyansford line. The Main Line points of this crossover are secured by a Miniature Staff Lock.

Amend Diagram 54/90. (SW 353/94, WN 45/94)

21.11.1994 **BP Oil Siding, Paisley**

Commencing at 0700 hours Monday 21.11.94, the Standard Gauge line will cross the Broad Gauge switch locked siding at the BP Siding, Paisley (15.5 km). Until full interlocking is provided, the following procedures apply to any Standard Gauge vehicle requiring to cross the Broad Gauge siding.

Two notice boards have been erected, one on each side of the grade crossing 50 metres from the crossing. The boards are lettered "Drivers must obtain permission from the Operational Supervisor to proceed beyond this point".

When it is necessary for a Standard Gauge rail vehicle to cross the Broad Gauge line, or work within the notice boards, the Operation Supervisor must communicate with the Signaller, Newport, and request permission to foul the track within the Notice Boards. The expected duration of occupancy must be stated. Prior to granting permission, the Signaller, Newport, must communicate with the Train Controller to check that permission has not been granted for a train to depart or enter the BP siding and to ascertain the next expected Broad Gauge train requiring to cross the Standard Gauge. The period of time granted to the Operational Supervisor must be entered into the Train Register Book and the names of both the Operational Supervisor and Signaller must be exchanged for record purposes.

The period of time granted to the Operational Supervisor must not exceed 120 minutes.

The Signaller, Newport, is responsible for granting permission to a train Driver to enter or leave the BP siding.

When the Operational Supervisor receives permission to foul the Broad Gauge siding, he must enter the period of time granted into the log book, and endorse the supervisors location graph. The Operational Supervisor is responsible for ensuring no rail vehicle is within the notice boards after the time has elapsed.

The Signaller, Newport, must be notified immediately should any rail vehicle become disabled within the notice boards. If a train is required to enter or leave the BP siding while a disabled rail vehicle is between the notice boards, the Operational Supervisor must ensure that the disabled vehicle is clear of the fouling point of the grade crossing. The Operational Supervisor is responsible for informing the Driver of the Broad Gauge train that the disabled vehicle will not be moved until the crossing is complete, and ensuring that the vehicle is not moved. (SW 344/94, WN 45/94)

(22.11.1994) **Newport Yard**

The following instructions will apply whenever it is necessary for a train to arrive into or depart from the new sidings area. At a latter date, motorised rail security gates will be provided across the entrance to the new yard area. Additional instructions will be issued prior to the commissioning of these gates.

Trains Arriving into the Yard when Shunters are not on duty

Prior to the Shunters ceasing duty, the points will be set for a vacant siding. Upon the train being stabled the train crew will exit the yard through the personnel gate and walk to Newport via the footpath.

Trains Departing the Yard when Shunters are not on duty

The train crews will access the area via the personnel gate. Prior to departure, the Driver must ensure that the points are correctly set for the train to depart onto the Up line. The Driver must then proceed with the train towards the Notice Board and obtain permission from the Signaller, Newport "A".

Newport Area

To control trains arriving into the Newport Workshops area, a notice board has been erected 250 metres on the Down side of Post 37. The board is lettered "Trains or Locomotives must not pass this point without permission from Shunter Newport Workshops". A hinged cover is provided for the board. The Shunters at Newport Workshops will arrange for the board to be displayed between 0800 hours and 1545 hours Monday to Friday (public holidays and EDO days excepted).

When any train or locomotive is required to be routed into the Newport Workshops area while the Shunters are on duty, the Signaller, Newport "A", must contact the Leading Shunter by radio or by telephone and obtain permission prior to allowing the train or locomotive to enter the Yard area.

A 'Limit of Shunt' Board lettered "Trains or Locomotives must not pass this point without the permission of the Signaller Newport 'A' Signalbox" is provided 170 metres on the Down side of Post 37.

When it is necessary to shunt past this board towards Newport, the employee in charge of the movement must obtain permission from the Signaller, Newport "A",. The Signaller must sleeve the levers to prevent any train or locomotive from entering the Workshops area prior to granting permission. The Signaller must be advised when shunting has been completed and the line is again clear for traffic. The times during which shunting has taken place and the name of the Signaller and employee in charge of the movement must be recorded in the Train Register Book at Newport "A".

Notice Boards have been erected at the exits of the Workshops Yard area and 'Steamrail' area. These Boards will display "Trains or Locomotives must not pass this point without permission from Shunter Newport Workshops" while Shunters are on duty. At other times, a hinged cover will obscure this message. The cover is lettered "Trains or Locomotives must not pass this point without permission from Signaller Newport 'A' Signalbox". The Shunters are to arrange for the correct sign to be displayed. During the period that Shunters are on duty, all movements will be conducted under their instructions.

Newport Yard Radio Communications

A closed user radio system operates within the Newport Yard Area to co-ordinate movements between the Shunters, Newport 'A' Signalbox and the Leading Shunter. Drivers arriving at Newport Workshops must collect a yard radio from Newport 'A' Signalbox prior to entering the Workshops area. The radio must be returned to the Signaller upon departing the area.

This instruction supersedes O.2713/90 and replaces Rule 5 on page 34-5, Book of Rules.

(SW 330/94, WN 44/94)

(22.11.1994) **Sunshine - Deer Park**

Replace the current instruction in the third paragraph, page 29, Master Train Plan with

> Automatic and Track Control, operated from Sunshine, is in force between Sunshine and Deer Park West. Between Sunshine and Deer Park West there are two tracks known as North and South Tracks which are signalled for two way running. Sunshine is attended from 0520 hours Sunday until 0400 the following Sunday.

Replace the first sentence of paragraph four with:

> Automatic and Track Control is in force between Sunshine and Warrenheip (SW 340/94, WN 44/94)

25.11.1994 **Dandenong**

On Friday 25.11.94 the following track and signals alterations took place:

1. The Down end connection between Nos 3, 4, and 5 Roads and the Up line was removed.
2. Home U45 and Dwarfs 53, 54, 57, 70, and 71 were abolished.
3. Points 64 and 69 were disconnected and secured normal.
4. Baulks were provided at the Down ends of Nos 3, 4, and 5 Roads
5. Movements from the Main Line to No 3 Road are governed by low speed indications.
6. Levers 53, 54, 64, 69, 70, and 71 are sleeved normal.

Amend Diagram 29/90. (SW 356/94, WN 46/95)

25.11.1994 **Dandenong - Cranbourne**

passage of traffic over the Through Siding. The points to the Pilkington ACI Siding, Kimberly-Clarke Siding, and ABB Transportation Siding are secured by a hand locking bar and padlock. A speed restriction of 15 km/h will apply to all traffic passing over the Through Siding. Permanent Way Warning and Caution Signals will be provided. Amend Diagram 29/90. (SW 360/94, WN 46/94)

26.11.1994 **North Geelong "C"**

On Saturday 26.11.94 and Sunday 27.11.94, Points 18 and 49 leading to the Departure track were spiked to lie for the Arrival track and are to be removed at a latter date. Disc 5 on Post 14 was removed. Levers 5, 18, 48, and 49 are sleeved normal. Amend 54/90. (SW 355/94, WN 46/94)

27.11.1994 **North Geelong "C"**

On Sunday 27.11.1994, Post 44 was moved 3 metres to the left to cater for track re-alignment account the Standard Gauge. (SW 359/94, WN 46/94)

28.11.1994 **Pura Pura**

On Monday 28.11.94, the TAILS units at both ends of Pura Pura Loop were removed. Until further notice, Pura Pura may be used as a Crossing Loop with roll by inspections being carried out in the usual manner. Follow on train movements to Pura Pura Loop are not permitted unless it has been ascertained that the preceeding train has departed the loop and is complete in the next single line section. (SW 358/94, WN 46/94)

(29.11.1994) **Heidelberg - Rosanna, Failure of Signals at Rosanna Junction**

If a train arrives at Post 14 or Post 1 and the signal is at Stop and there is no sign of an approaching train, the Driver must communicate with the Signaller at Heidelberg via the Post telephone. If the signal has failed, the Signaller must sleeve the levers of the signals applying to the single line. It will only be necessary to place Points 8 into the hand operating position if the points have failed. In this case, the Signaller will instruct the Driver to place the points in the hand operating position. The Signaller must then issue a Caution Order (form 2377) to the Driver as authority for the train to pass the signal at the Stop position. If the junction points have been operated manually, the points may be left in the hand operating position until the Driver of the next train is instructed to operate them by the Signaller.

If a competent employee is in attendance at the junction, the operation of the points and delivery of a Caution Order to the Driver will be undertaken by the competent employee acting under the instructions of the Signaller, Heidelberg.

Insert on page 35-8, Book of Rules. (SW 342/94, WN 45/94)

02.12.1994 **West Tower**

On Friday 2.12.94, the connections to the South Yard from the West Yard (via Points 103 normal) and from D Balloon (via Points 105 reverse) were booked out of service to allow construction of the Melbourne Steel Terminal.

Dwarf 102 was abolished. Dwarf 104 is temporarily out of service until the new connection to the Steel Terminal is brought into use. The route setting buttons for Dwarfs 230 and 232 towards the South Yard were made inoperative. A baulk was placed at the Down end of Points 105.

The connection from the West Yard to the South Yard via the Weighbridge Track will remain in service.

Amend diagram 14/89. (SW 363/94, WN 47/95)

04.12.1994 **Hurstbridge**

Commencing Sunday, 4.12.94, Hurstbridge will be worked under Driver-in-Charge conditions on Sundays.

Prior to signing off at 2000 on Saturday, the station staff at Hurstbridge must carry out the following duties:

1.1 After the necessary safeworking procedures have been carried out after the departure of the 1951 hours Up Hurstbridge train (No 1286), the Train Staff Box will be relocated to the Drivers locker room at the Down end of the station building.

1.2 The Train Register Book is to be prepared for Sunday by inserting the day and date in the appropriate place. A paper clip is to be provided at the top of the appropriate page for attaching cancelled Train Staff Tickets.

1.3 Sign-on/Sign-off sheets, Special Notices, Circulars, etc, are to be placed in the locker room for perusal by Drivers.

The following articles are contained in the Locker Room for the use of Drivers when carrying out safeworking requirements:

2.1 A safe

2.2 A strongbox containing the key to the safe

2.3 An auto phone

2.4 The Train Staff Ticket Box

2.5 The Train Register Book and a copy of this instruction

The duties of the Driver of the first "on" train at Hurstbridge on Sunday will be:

3.1 Sign-on duty at the rostered time and peruse all Special Notices, Circulars, etc.

3.2 Proceed to the Up end Main Line points and ensure that the points are correctly set for the passage of the train and that the Down Home signal is at Stop.
3.3 Proceed to the security stabling compound (Down end, No 4, 5, and 6 roads). Open and secure the security gates. Prepare train and dock to platform.
3.4 Proceed to the Locker room. Unlock the strongbox and remove the key to the safe. Unlock the safe and remove the Train Staff for the Hurstbridge - Eltham section.
3.5 Examine the Train Register Book to ensure that the arrival of the previous train is shown.
3.6. Place the Train Staff into the Train Staff Ticket Box lock, turn the Train Staff clockwise, and slide the lid of the box to the left.
3.7. Remove the Train Staff Ticket Book. On the next sequentially numbered Train Staff Ticket fill in the Train Number (T.D. 1220); departure station (Hurstbridge) and arrival station (Eltham); and the date. The ticket is then to be signed. The details on the butt are to be filled in.
3.8. Tear out the Train Staff Ticket. The Book is to be then replaced in the Box (butt first, so as to avoid jamming). Close the lid of the Box and turn the Staff anti-clockwise to release the Staff. Note: the Train Staff cannot be released from the Box unless the Ticket Book is replaced into the receptacle provided.
3.10 Replace the Train Staff in the safe and lock the safe. Replace the key to the safe in the strongbox and lock the strongbox. Make an entry in the Train Register Book that the Train Staff has been locked away: vis. 'S.L.A.' (Staff Locked Away).
3.11 Contact the Signaller at Eltham using the Auto phone and dictate the following *exactly:* "APIX number 1220 at (time) hours".
3.12 Enter the details for Train Number 1220 in the Train Register Book on the correct page. Down trains are to be entered on the left hand page; Up trains on the right. Sign in the Train Register Book and enter the following details: Train Number; Time of Departure (in the APIX column); and the number of the Train Staff Ticket issued. Any details of irregularities concerning train running (e.g. late running) are to be entered in the Remarks column. Sign out of the Train Register Book.
3.13 Close and lock the Locker Room. Take the train to Eltham at the scheduled time.

The duties of the Driver of the second "on" train at Hurstbridge on Sundays will be:
4.1 Sign-on duty at the rostered time and peruse all Special Notices, Circulars, etc.
4.2 Proceed to the security stabling compound (Down end, No 4, 5, and 6 roads). Alter points for the train to shunt, as necessary. Prepare train and dock to platform. Return to close and lock the security compound gates.
4.3 Proceed to the Locker room and contact the Signaller, Eltham, to obtain the "ACRE" message for train 1220. Sign-in the Train Register Book and enter the details for Train 1220 on the right hand page.
4.4 Unlock the strongbox and remove the key to the safe. Unlock the safe and remove the Train Staff for the Hurstbridge - Eltham section. Relock the safe, replace the key to the safe in the strongbox, and relock the strongbox.
4.5 Enter the Train Number; and Time of Departure for Train Number 1222 in the Train Register Book. Any details of irregularities concerning train running (e.g. late running) are to be entered in the Remarks column. Sign-out of the Train Register Book.
4.6 Take the Train Staff and lock the Locker Room. Proceed to the Quadrant located at the Down end of the station building. Unlock the lever and reverse it. Ensure that the Down Home signal is at Proceed and relock the lever. Take the train to Eltham at the scheduled time.

The duties of the Driver of the second last train to arrive at Hurstbridge on Sundays will be:
5.1 After train 1295 has arrived complete at Hurstbridge, the Driver must proceed to the Quadrant at the Down end of the station building. Unlock the lever, restore it to normal, and relock the lever. Ensure that the Down Home signal is at Stop.
5.2 Proceed to the security stabling compound and open the gates. Alter the hand points as required. Return to train and, after shunting to siding, stable the train.
5.3 Proceed to the Locker Rome and contact the Signaller, Eltham. Give the "ACRE" message to the Signaller *exactly* as follows: "ACRE Train Number 1295 at (time) hours".
5.4 Sign-in the Train Register book and enter the following details for train 1295 on the left hand page: Train Number (1295); actual time of arrival; time "ACRE" message sent; and the number of the Train Staff Ticket. Enter any details pertaining to train information in the Remarks column. Write "Cancelled" across the front of the Train Staff Ticket and sign it, adding the date and time. Place the cancelled Down Ticket into the paper clip provided.
5.5 Proceed to the Quadrant on the platform. Unlock, reverse, and relock the lever. Ensure that the Down Home signal is at Proceed.
5.6. Sign-off duty at the appointed time.

The duties of the Driver of the last train to arrive at Hurstbridge on Sundays will be:
6.1 After train 1297 has arrived complete at Hurstbridge, the Driver must proceed to the Quadrant at the Down end of the station building. Unlock the lever, restore it to normal, and relock the lever.

Continued on Page 16

NEWPORT - SUNSHINE LOOP LINE, 1953

With the provision of the Dual Gauge between Newport and Brooklyn, it is interesting to look back forty years at the Loop Line

The diagram presented here is based on a 1953 print of Signalling Arrangements drawing RF307. This had been drawn "as in service" on 7 May 1932 and replaced an earlier drawing dated 11 April 1924. Between 1932 and 1953 a number of alterations were made to the track and signalling shown on the drawing. Those recorded on the diagram were

29.11.33 Kingsville Quarries Siding removed.
19.04.37 Tablet Locks and connections removed from Brooklyn "A"
03.06.38 Home signals and Flashing Lights added at Geelong Road level crossing.
02.09.41 Tablet locked connection at Down end of Amalgamated W'shops siding deleted
08.08.42 Defence Siding and Down Departure Home Signal at Brooklyn 'A' added.
29.03.45 Smorgon's and Ready Mixed Concrete Coy's sidings added
13.02.48 Brooklyn 'A' Block Post previously on opposite side of track
02.03.51 Wright Stephenson and Co Pty Ltd Sidings added
07.02.53 Turnout at Down end of Caltex Oil Siding abolished.

Details for the 'Prahan City Council's Siding' and Watkin's Siding have been added to the diagram from an earlier print of RF307.

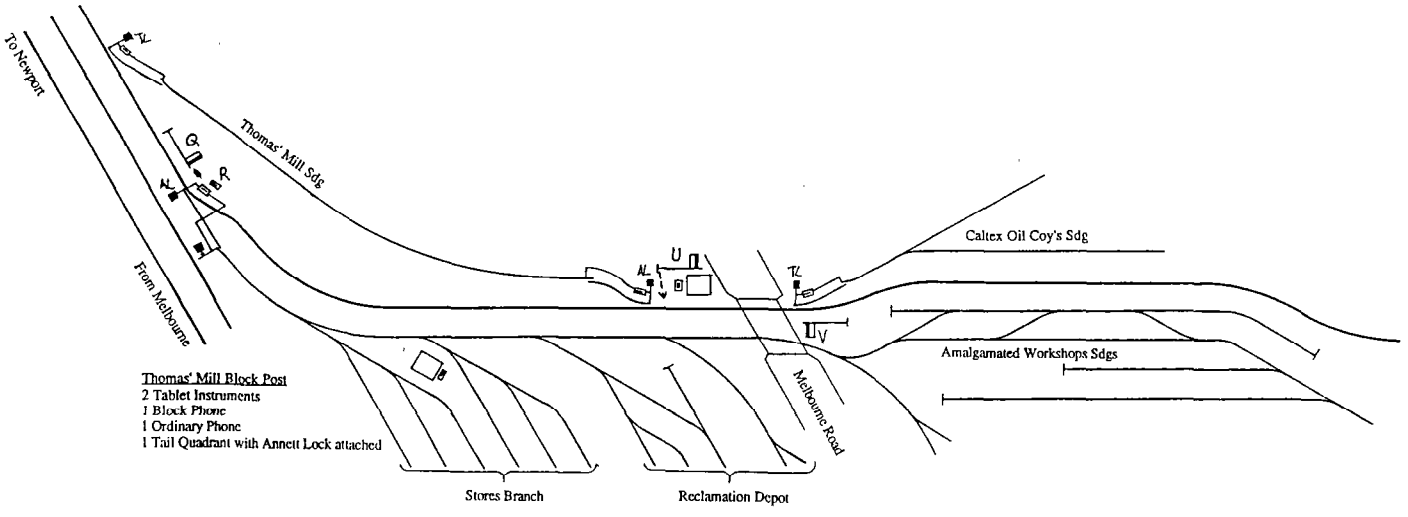

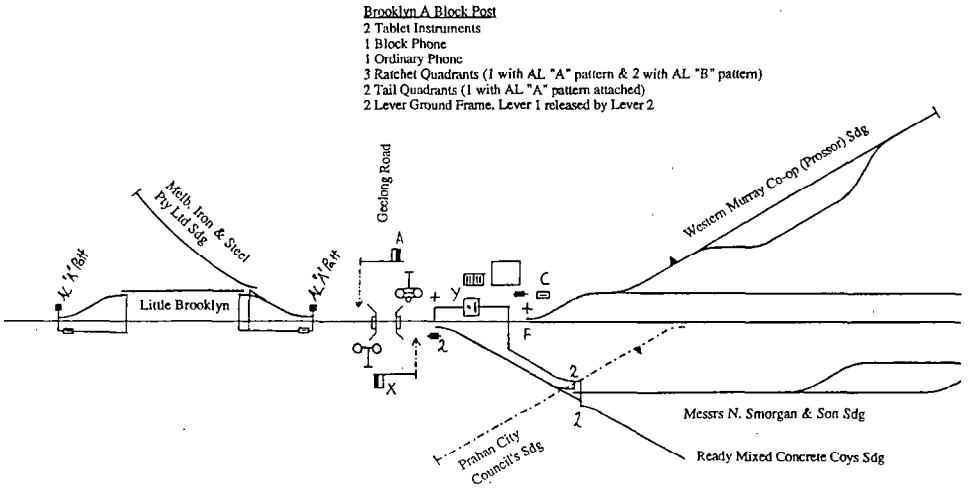

Signal	Type	Worked from	Locked normal by	Detects
Q	18' Wood	Quadrant R or Thomas' Mill Block Post		AL points reverse when worked from Quadrant R
U	25' Steel	Quadrant at Melbourne Road.	Padlock	
V	20' Steel	Quadrant at Melbourne Road.	Annett Lock on Quadrant	
W	20' Wood	Quadrant B or Quadrant at Brooklyn.	Annett Lock "A" pattern on both Quadrants	
A	25' Steel	Lever 1 in Ground Frame or Quadrant at Brooklyn or Quadrant C		Points F normal & plunger in and Points 2 normal & plunger in when worked from Brooklyn. Points 2 normal & plunger in when worked from Quadrant C
X	20' Wood	Quadrant at Brooklyn	Annett Lock "A" pattern	
Z	23' Steel	Quadrant at Brooklyn or Quadrant D	Annett Lock "B" pattern on both Quadrants	
H	16' Steel	Quadrant at Brooklyn or Quadrant E	Annett Lock "B" pattern on Quadrant at Brooklyn	Points G normal & plunger in when worked from Brooklyn

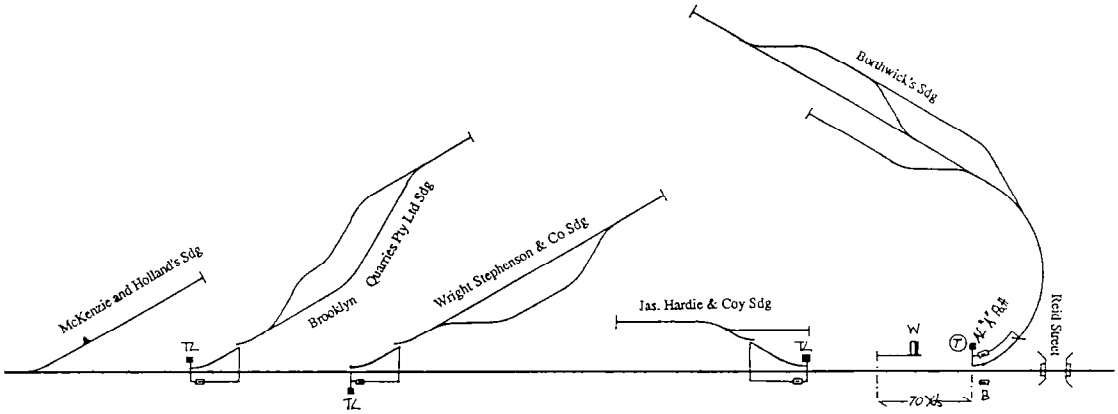

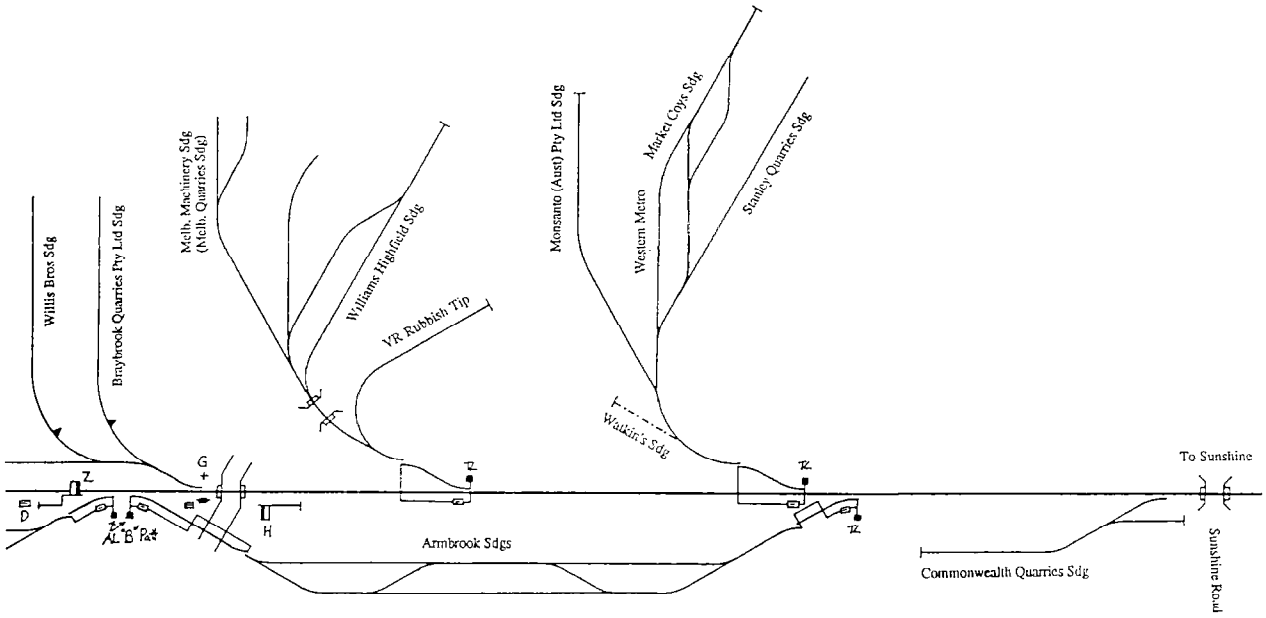

JEWELL
(SOUTH BRUNSWICK)

Andrew Waugh

After reaching the plateau on which Brunswick is built, the environment of the Coburg line suddenly changes at Park Street. The greenery of Royal Park is replaced by the closely packed terrace houses and then the factories of Brunswick. The first station in this section is Jewell, known as South Brunswick until 1954.

Early years

South Brunswick station was opened for passenger traffic with the Coburg line on the 9 September 1884. The line was single track and a single platform was provided on the Up side of the line between Barkly and Union Streets. A permanent station building was not erected until late 1888. The contract for the erection of the brick station buildings was Gazetted on 31 August 1888 to McConnell and McIntosh for £1720/17/1. These gentlemen also won the concurrent contracts to construct the buildings at Brunswick and Moreland. This building survives today on the Up platform.

The Goods Yard, located opposite the passenger platform, was opened on 2 December 1884. Tenders had been called for the lease of firewood allotments at South Brunswick in late November and a further 10 allotments were advertised in late December. By 1886 the Sands and McDougall directory listed four wood merchants located in the South Brunswick goods yard. A lengthy siding was opened in 1886 to serve the Hoffman Brickworks and Cornwall's Pottery. This private siding was a continuation of the goods siding. It ran parallel to the main line northwards across Union and Dawson Streets before curving sharply westwards to run along the south side of Phoenix Street to the brickworks at Fallon Street. The major traffic on this siding was probably also inwards firewood.

The construction plans for the line show that gates were to be provided Parkside Street, Brunswick Street, Union Street, and Phoenix Street. All these level crossings were equipped with four 13' 6" gates. Dawson Street was not mentioned.

The staff sections upon opening were Royal Park - Brunswick. This section was divided on 16 August 1886 when South Brunswick was made a Staff station. By 14 January 1887 block working had been introduced on the sections Royal Park - South Brunswick - Brunswick. The block was apparently only used on weekdays.

Royal Park Junction was opened on 2 September 1888 when the Coburg line was duplicated from Macaulay Road to Royal Park Junction and from there to Langridge Street (North Carlton) station on the Inner Circle line. The Block section then became Royal Park Junction - South Brunswick, but the staff section remained Royal Park - South Brunswick. With the introduction of the new timetable on 1 October, South Brunswick was closed as a Staff station, the section then reverting to Royal Park (station) - Brunswick. South Brunswick remained a Block post which resulted in the interesting situation of a Staff section with two intermediate Block Posts (Royal Park - Royal Park Junction - South Brunswick - Brunswick).

The Coburg line was duplicated between Royal Park Junction and South Brunswick on 5 May 1889. It is likely that this short duplication was provided to allow Down Coburg trains to await arrival of Up Coburg trains without blocking Up trains on the Inner Circle. Probably to reduce costs, the double line ended on the south side of Barkly Street and the track and facilities at South Brunswick itself were probably not altered. The layout is shown in figure 1. A small cabin, only 11' 1" long, was provided adjacent to the Barkly Street gates. The twelve lever frame in this cabin worked the signals, the points at the Up end of the yard, and the wickets at Barkly Street. The Barkly Street gates continued to be worked by hand, as did the single set of main line points at the Down end. According to the locking sketch, the frame was erected on 26 March 1889.

Duplication Northwards

Before the coming of the railway line, the operation of the brickworks had resulted in a large clay pit being dug between Phoenix and Albert Streets. The railway crossed this hole by an embankment and duplication between South Brunswick and Brunswick could not occur until this embankment had been widened. By 1892 this was the last single track section between Melbourne and Coburg.

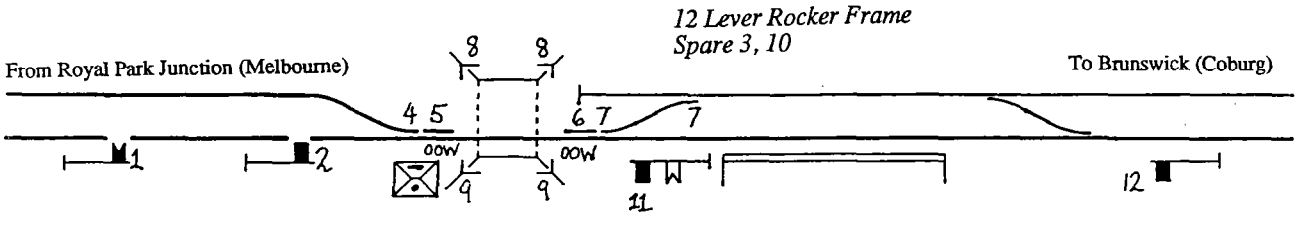

Figure 1: This diagram is taken from the Interlocking Sketch issued for the duplication and partial interlocking of 1889. It appears that yard at South Brunswick at this time consisted of a single loop siding with an extension northwards to the pottery siding. However, locking sketches of this period do not always show all non-interlocked sidings. The crossover at the northern end of the siding is hand operated and probably fitted with hand locking bars. No provision was made in the interlocking frame for working the hand gates at Barkly Street, and it is possible that the working of the wicket gates from the frame was not originally intended as the operating levers (8 and 9) are in the middle of the frame, not at the right hand end as was normal.

Widening this embankment must have been a large job. The 1904 MMBW 10' to 1" plan of the area shows that the clay hole on the west side of the line was about 80 feet deep; that on the east was only 20 feet or so. The top of the embankment was only 30 feet wide.

It appears that the earth to extend the embankment came from the cutting between Royal Park and Royal Park Junction. Widening this cutting allowed the Inner Circle to be extended back to Royal Park and the cabin at the Junction to be abolished. This occurred on 5 June 1892 and the block section then became Royal Park - South Brunswick.

The duplication between South Brunswick and Brunswick was brought into use on 17 August 1892 and a number of alterations were made to South Brunswick. The resulting layout is recognisable even today.

The goods yard was relocated northwards to a new site between Union and Dawson Streets. A new Down platform was built opposite the original platform on the site of the first goods yard. A shelter shed and booking office was erected on the Down platform by Bulte & Co for £177/11/8 in late 1892.

The small signalbox at Barkly Street was replaced by larger box at Union Street containing a 27 lever rocker frame. All points and signals, together with gates at Union Street, were worked from the new box. Figure 2 shows the layout at South Brunswick in 1926, but this has not significantly changed since 1892. Since no contract was recorded in the Government Gazette for the the erection of the new Signalbox, it is likely that the box was relocated from another site in Victoria. The 27 lever frame had levers at 6" centres instead of the 5" normally used in Victoria. This type of frame was unusual in Victoria and only one other (at Waubra Junction) is known to have existed.

Two additional signals were provided on 4 October 1897. Judging by the interlocking sketch, these were Discs 16 & 17 applying for movements from the Goods Yard.

Alterations to the Station

To save the wages of the signalmen the block instruments were relocated to the station offices on 10 November 1903. Quadrants were provided on the Up platform to work all main line signals, except the Down Home on Post 28. An additional quadrant was provided on the Down platform to control the Down Home and Distant signals. The gates and wickets at Union Street were disconnected from the frame and worked by a gatekeeper. The signalbox remained in use, but it was only manned when the goods train was shunting the siding. The signalman accompanied the goods train and worked 'under the direction of the station employee whose duty it is to work the block instruments'. The box controlled all main line signals except the Up Starting signal (Post 24), which was worked solely by the quadrant on the Up platform, and the Down Home on Post 28 which was worked solely from the box and which normally stood at 'all clear'. Similar alterations were made on the same day at Brunswick and Moreland. This mode of operation remained until the middle of August 1911 when the Weekly Notice notified that the "Block Instruments and Fixed Signals are now worked from the

On 1 July 1913, Siding "A" was extended to a dead end at the Up end of the yard. A point indicator was provided on the points leading from Siding "A" to the Down line.

The interlocking frame in the signalbox was replaced by a 31 lever A pattern tappet frame on 13 September 1925. No changes to points or signals were made. Even though the new frame had more levers than the old frame, because the levers in the new frame were at 5" centres, the new frame was actually shorter (12' 8") than the old frame (14' 1").

Mostly concerning gates

Due to the sharp curve approaching South Brunswick in the Down direction, the Down Distant signal had been situated on the wrong (i.e. right hand) side of the line. In the middle of September 1911 a co-acting arm for this Down distant was provided on a new post (23A) on the left hand side of the line.

On 20 June 1924 a Down Home signal was provided on Post 23A to protect the gates at Park Street and Brunswick Road. This Home was worked from the gatecabin at Park St and controlled from Brunswick Road. The original Down distant was concurrently abolished from Post 23, though this post continued to carry the Royal Park Up Distant. The provision of this Home Signal was probably due to the poor sighting of the gates as the trains climbed around the sharp curve. The advance warning of the gates meant that Down trains could avoid slowing down on the 1 in 50 grade.

Just six months later, in the beginning of December 1924, electric bell communication was provided between Royal Park signalbox and Park Street and Brunswick Road gatecabins. All Down trains were signalled by one long ring as the train left Royal Park. To give the gatekeepers more warning, and to prevent delays to trains, this was altered on 12 February 1932 when trains were signalled upon the train entering the platform. By 1953, the announcement of Down trains was being given by the occupation of a track circuit which caused the bell to "ring for a period of five seconds" at the gatecabins. By this date, the circuit had been extended to include the gatecabin at Barkly Street.

At the beginning of December 1940 the signalling was rearranged to provide Home signals to protect most of the hand gates on the Coburg line. This was generally achieved by providing controls on existing Home signals, but a number of new signals were provided. At South Brunswick the alterations were:

- † The provision of a new Up Home signal (Post 23C) worked by the gatekeeper at Park Street.
- † The Down Home signal on Post 24 was relocated to a new lop bracket Post 24B on the Up side of Barkly Street. This signal continued to be worked from the Signalbox, but was also controlled by the gatekeeper at Barkly Street.
- † The Up Starting signal on Post 24 was controlled by the gatekeepers at Barkly Street and Brunswick Road.
- † The Down Starting signal on Post 28 was controlled by the gatekeeper at Dawson Street.
- † A new Up Home signal was provided on the Down side of Dawson Street on a new Post 28B

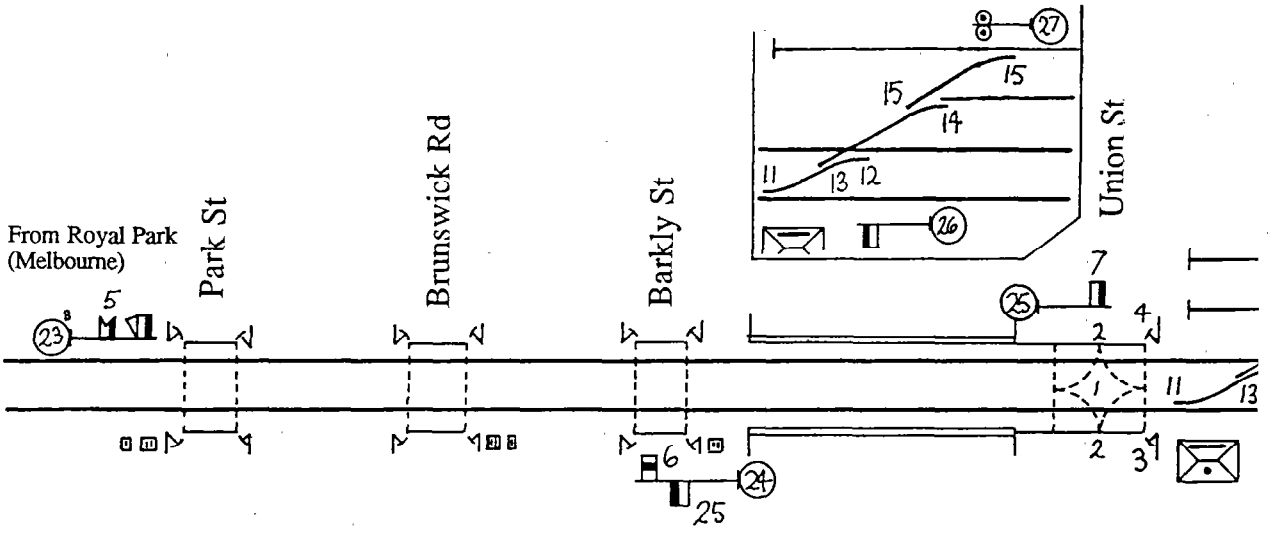

Figure 2 (above). South Brunswick in 1926. The lever numbers are taken from a 1890s locking sketch. As described in the text, the only significant alteration to the frame between the 1897 and 1926 was the extension of Siding A to a dead end at the Up end. This would have caused a renumbering of the Up end connection to the sidings. The original numbering is shown in the inset, the numbering on the main diagram of this connection is conjectural. The use of separate levers to work the trap points (12 and 13) was standard practice before the turn of the century and had the advantage that the route from Siding B to the Up Main Line could be set up (levers 11/14/15) without closing the trap points in Siding A. The improvement in safety gained, however, was minimal. By 1926, the hand gates at Park Street, Brunswick Road, Barkly Street, and Dawson Street had all been provided with controlled wickets worked from non-interlocked ground frames, but the actual date of their installation is not known.

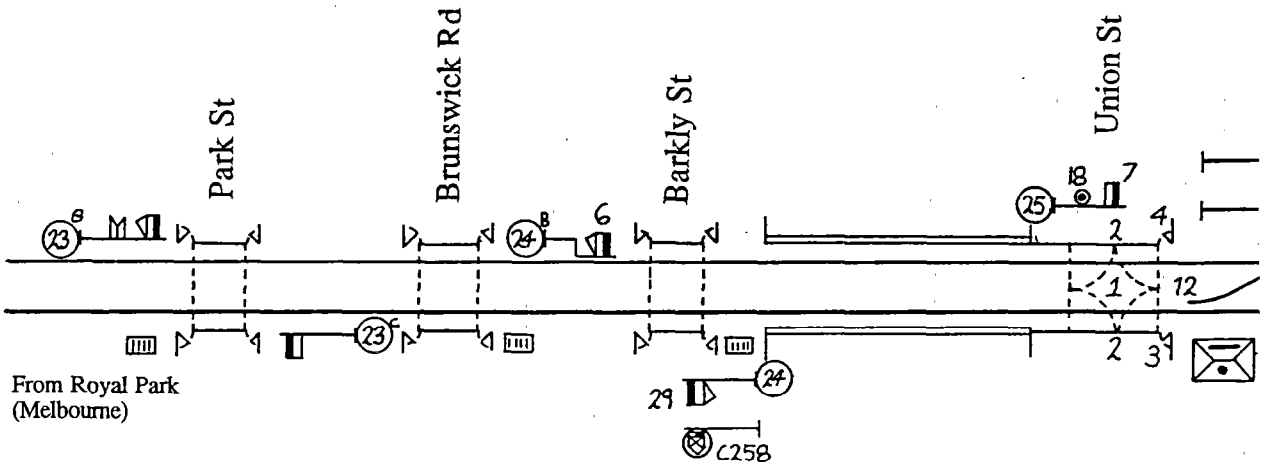

† The Up and Down distants (worked by levers 1 and 31), together with Brunswick's Down distant on Post 28, were fixed at Caution. This avoided complicated slotting.

† Small four lever non-interlocked ground frames were provided at Park Street, Brunswick Road, Barkly Street, and Dawson Street to work the wickets and signals. These replaced two lever ground frames at these locations.

The Phoenix Street gates were not provided with protecting signals. The gates protected by signals were exempted from Regulations 139 and 140, which meant that the gates could be left open for road traffic and only closed across the road when a train was coming.

On 10 June 1949 bell communication was provided to all level crossings in the South Brunswick area not already provided with this method of communication. A bell circuit was provided from South Brunswick signalbox to the gatekeepers cabins at Barkly Street, Brunswick Road, and Park Street with return ringing facilities at Park Street. This was only used to announce Up trains which were belled to Park Street when Train Departure was received from Brunswick. A second bell circuit was provided from South Brunswick signalbox northwards to the gatekeepers cabins at Dawson Street, Phoenix Street and Albert Street, with return ringing facilities at Albert Street. This was used to announce both Up and Down trains. Down trains were belled on this circuit when the train was approaching the Down Home signal (Post 23C), while Up trains were belled when Line Clear was granted to Brunswick.

Postwar

South Brunswick was renamed Jewell on 1 February 1954.

The Up end connection to the sidings was temporarily out of use from 17 January 1959 while the single and double compounds were replaced by three crossovers. As a side effect, this allowed Down goods trains to arrive directly into the sidings instead of having to shunt past

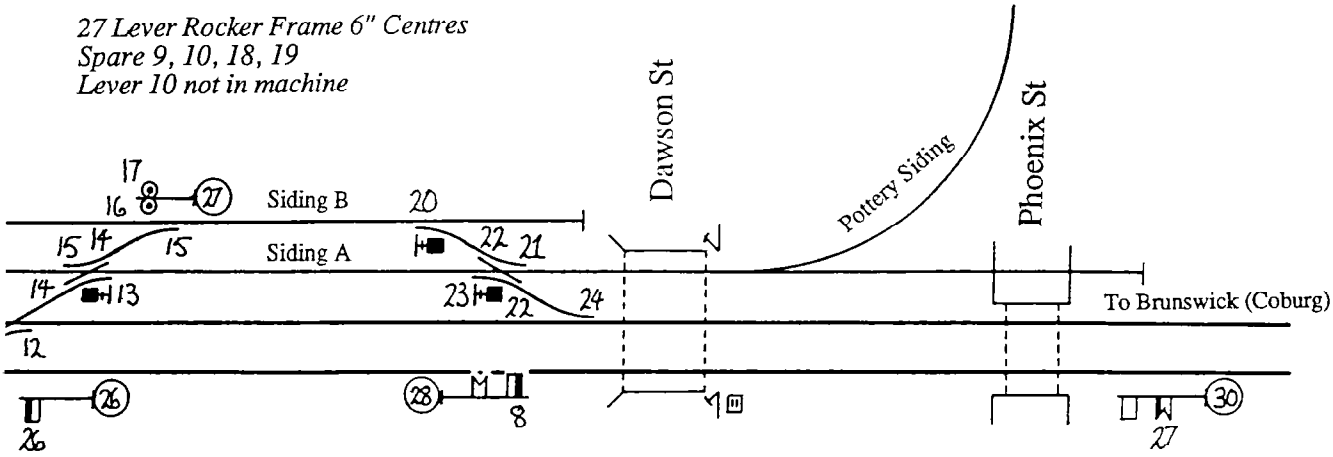

Figure 3 (below). Jewell in 1959 after the Up end connection to the Goods Siding had been renewed. Since 1940, signal protection had been provided for all hand gates except Phoenix Street. Park Street worked the Homes on Post 23B and Post 23C. Brunswick Road controlled the Homes on Posts 23B and 24. Barkly Street controlled the Homes on Posts 24B and 24. Dawson Street controlled the Home on Post 28 and worked the Home on Post 29. Posts 23C and 24 were removed in 1971 when automatic signalling replaced block working to Royal Park. Automatic signal C.258 was provided at that time. The other major alteration since 1959 has been the removal of Siding B. The point indication on Points 25 and Disc 19 have also been removed over time.

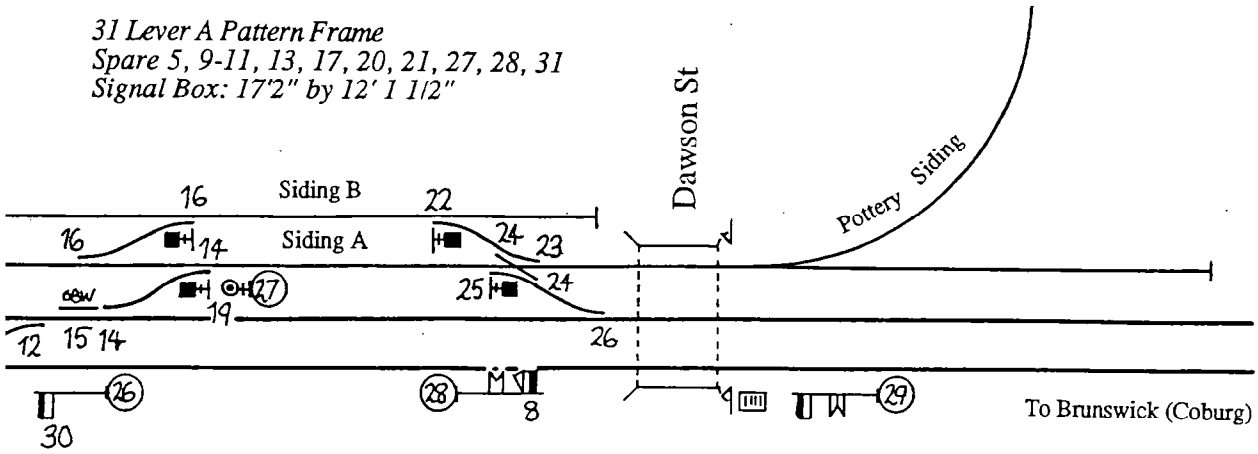

Dawson Street and reverse in. The new layout was brought into use on 25 January. Post 27 was abolished and replaced by a single ground disc, numbered 27, applying from Siding A to the Down Main Line or the Dead end. Ironically, Post 27 had only been renewed on 9 June 1955.A disc signal was provided on Post 25 for movements from the Down Main Line to Siding A and a point indicator on the Up end points in Siding B. The new layout is shown in figure 3.

The ground frame and foundations were renewed at Brunswick Road on 19 September 1959. The two arms on Post 28B were lowered 5 feet on 29 June 1967. This probably marks the provision of the footbridge at Phoenix Street, and the abolition of the level crossing at that location.

The seventies

Double line block working was abolished between Royal Park and Jewell on 22 August 1971. The major alteration at Jewell was the removal of the Up home signals on Posts 23C and 24. Post 24 was replaced by an automatic signal C.258 which was controlled by the gatekeepers at Park Street, Brunswick Road, and Barkly Street and the signalman at Royal Park. The control at the gatecabin was a small thumb switch mounted on a large metal box in the cabin. The Down home signal on Post 23 was fitted with a reverser, and the signals on Posts 23, 24B, and 26 were electrically lit.

The pottery siding (Hoffman's Siding) was lifted by the Tramway Museum Society of Victoria over two weekends before Easter 1972. The rail was exchanged with the VR for rail left in situ north of Bylands - which saved transport costs. A photo of this lifting operation appeared in the April 1972 issue of Running Journal.

Jewell was closed for goods traffic at the beginning of November 1977, and Siding B was removed on 23rd of that month. Crossover 16 and Points 22, 23, and 24 were disconnected on 15 December. These levers were sleeved normal and subsequently removed. The goods yard was subsequently used as the site of the Railways concrete casting yard.

Rotating red lights were provided at both Union Street and Brunswick Road gates on 11 September 1979. The lights at Union Street are operated by placing the gate stop lever in the special notch. The Brunswick Street lights are operated through switches "located each side of the level crossing."

Recent years

In recent years, Siding A continued to be occasionally used. In August 1990, for example, two bogie waggons loaded with precast concrete components were noted in the siding. More recently, in June 1992, it was used during weekend trackwork to allow track machines to be remarshalled. This was probably the last time the Down end crossover (25/26) was used as in early August the Weekly Notice stated that "advice has been received that Nos 25 and 26 points [...] have been booked out of service". By the beginning of the following year Siding A had been baulked on the Up side of Dawson Street and the crossing in Points 26 had been removed. By August 1993 Points 14 had been spiked normal. Ground disc Post 27 has also been removed, but no record of this event seems to have been kept.

Entirely unrelated to railways, but of interest to transport enthusiasts, was the engine house for the cable trams in Brunswick Road and the 'horse trams' in Union and Albert Streets.

The engine house for the Sydney Road cable tram line was located on the corner of Brunswick Road and Black Street, just to the east of the level crossing. Underground vaults were provided for the cable to run from Sydney Road to the engine house; quite possibly still under the road. The engine house is still standing and a portion appears to be used as a substation for the electric trams which replaced the cable trams.

The 1904 40' to 1" MMBW plans show 'horse tramways' running along the north carriageway of both Union and Albert Streets. These commenced at the potteries and ran eastwards to Sydney Road. Neither crossed the railway line; instead they terminated on the west side of the level crossing and recommenced on the east side. The gauge appears to be about 5 feet. I believe that these were not 'tramways' in the usual sense, but actually plateways for road vehicles. Coane (et al) in "Australasian Roads" (1908) notes that "steel plate wheelways" were provided on several main roads approaching Melbourne between 1880 and 1890. The form of construction was two 11" wide steel plates at 5' 1" centres. The plates were supported by 12" by 4" longitudinal timbers fastened to 9" by 3" by 7' sleepers spaced at 4' 7 1/2" centres. Stone sets were placed between the rails. These plateways were likely provided to reduce the road damage caused by heavily laddened brick carts travelling from the brickworks to Sydney Road.

Corrigenda

In the history of Royal Park (Somersault Vol 17 No 2), the caption to Figure 6 speculates that around 1938 the junction was realigned to make the Coburg line the 'straight'. It has since been pointed out that the junction was never realigned and the Inner Circle was always the straight. Figures 6, 7, and 8 are affected.

Rail services on the Inner Circle was to have been discontinued from the 11 July 1981. Representations from Bunge (Australia) Pty Ltd to the VR Board succeeded in obtaining a deferral, and the last train was scheduled to run on 31 July 1981. The line was officially closed the next day.

SIGNALLING ALTERATIONS

(Continued from Page 9)

Ensure that the Down Home signal is at Stop.

6.2 Shunt the train to the siding and stable the train. Close and lock the security gates.

6.3 Proceed to the Locker Room and contact the Signaller, Eltham. Give the "ACRE" message to the Signaller *exactly* as follows: "ACRE Train Number 1297 at (time) hours".

6.4 Sign-in the Train Register book and enter the following details for train 1297 on the left hand page: Train Number (1297); actual time of arrival; time "ACRE" message sent; and the number of the Train Staff Ticket. Enter any details pertaining to train information in the Remarks column. Write "Cancelled" across the front of the Train Staff Ticket and sign it, adding the date and time. Place the cancelled Down Ticket into the paper clip provided. Sign-out of the Train Register Book.

6.5. Sign-off duty at the appointed time.

The AGNE, AUDI, and AWAK messages are described for use when it is necessary to shunt to No 2 or 3 stabling sidings (i.e. outside the Down Home signal) when the Train Staff is at Eltham, but detailed instructions are not given. (TCO 28/94, WN 44/94)

09.12.1994 **Newport**

On Friday 9.12.94, Points 45U (linking the Dual Gauge track to Stabling Siding No 2) was provided with a Dual Control Point Machine. A Hand operated Hayes derail was provided at the Up end of Stabling Siding No 2. This derail may be locked "on" or "off". The derail must be locked "off" when trains are running to Brooklyn. A Notice Board lettered "Trains must not pass this point until advised by Hand Signaller" was provided adjacent to the derail.

Working Trains Through Stabling Siding No 2

Until full signalling and control of Points 45 is provided, moves to or from Brooklyn (i.e other than suburban shunts and docks) will require the services of a competent employee to act as a Hand Signaller in accordance with the following instructions.

A Down train through No 2 Siding must be stopped at Homes 38 or 42. The Hand Signaller must ensure that Points 45U are reversed and that both Hayes derails are locked "off". Permission must then be obtained from the Signaller, Newport, for the train to proceed past Home 38 or 42. The Hand Signaller will deliver a Signaller's Caution Order to the Driver and collect the Electric Staff. The Signaller, Newport, may signal the train from Stabling Siding No 2 using Dwarf 50.

An Up train must be routed to Stabling Siding No 2 as a normal signalled move. Drivers must bring their train to a stand at the Notice Board. The Hand Signaller is to ensure that the Hayes derail is locked "off" and that Points 45U are reverse. The Electric Staff must be handed to the Driver by the Hand Signaller as authority to pass the Notice Board and proceed to Brooklyn on the applicable line.

In all instances, the Signaller, Newport, must sleeve levers 38, 42, 54, 56, and 58 normal when giving permission for a train to proceed through Stabling Siding No 2.

The Stationmaster, Newport, is to ensure a suitably qualified Hand Signaller is available to work under the instructions of the Signaller, Newport, whenever necessary to route trains through Stabling Siding No 2. (SW 386/94, WN 48/94)

10.12.1994 **Anzac Siding (Newport - Sunshine)**

On Saturday 10.12.94, the safety points provided at the exit of Anzac Siding were converted to a Dual Gauge catch. (SW 394/94, WN 48/94)

12.12.1994 **Hurstbridge**

Commencing Monday 12.12.94, Hurstbridge will be worked under Driver-in-Charge conditions on Monday to Saturdays after 2000 hours. The last attended train will be the 1951 hours Up Hurstbridge (1286). The instructions are identical to those given in TCO 28/94 (see above) for the arrival of the trains at Hurstbridge in the evenings, except that

1. On Monday to Thursdays the last three trains arrive on Ticket (1993, 1997, and 1999). The Drivers of trains 1993 and 1997 carry out clause 5, while the Driver of 1999 carries out clause 6.
2. On Fridays and Saturdays the third last and second trains arrive on Ticket (1993 and 1997) and the last train on Staff (1999). The Drivers of trains 1993 and 1997 carry out clause 5, while the Driver of 1999 carries out the following instruction:

The duties of the Driver of the last train to arrive at Hurstbridge on Fridays and Saturdays will be:

6.1 After train 1999 has arrived complete at Hurstbridge, the Driver must proceed to the Quadrant at the Down end of the station building. The lever must be unlocked, restored to normal, and relocked. The Down Home signal must be checked to ensure that it is at Stop.

6.2 Shunt the train to the siding and stable the train. Close and lock the security gates.

6.3 Proceed to the Locker Room and contact the Signaller, Eltham. Give the "ACRE" message to the Signaller *exactly* as follows: "ACRE Train Number 1999 at (time) hours".

6.4 Sign-in the Train Register book and enter the following details for train 1999 on the left hand page: Train Number (1999); actual time of arrival; and time "ACRE" message sent. Enter any details pertaining to train information in the Remarks column.

6.5 Unlock the strongbox, remove key for safe and unlock safe. Place Train Staff in safe. Lock safe, replace key in strong box and lock strongbox.

6.6 Sign-out of the Train Register Book and sign-off duty at the appointed time.

(TCO 29/94, WN 46/94)

12.12.1994 **Sunshine**

On Monday 12.12.94 the signalling at Sunshine Loop was decommissioned. Posts SNE 2, SNE 4/U4, SNE 6/U6, and SNE 8 were removed. Controlled Automatic Signal MGS 352 at Tottenham was converted to a Home Signal. The special instructions in SW 76/94 (see Somersault Vol 17 No 4, page 59) will remain in force until the interlocking is altered. (SW 375/94, WN 47/94)

(13.12.1994) **Traralgon - Sale**

Return Train Orders may be issued between Traralgon and Sale for the following trains: 9459/8412, 8415/8438, and 8431/9460. Insert on page 35-8, Book of Rules. (SW 362/94, WN 46/94)

(13.12.1994) **Ferntree**

Advice has been received that the siding at Ferntree is not available for traffic. The points at each end of the siding have been spiked and the Home Signals secured at Proceed. The siding will be removed. Amend page 95, MTP (SW 350/94, WN 47/94)

(13.12.1994) **Monomeith**

Advice has been received that the siding at Monomeith is not available for traffic. The points at each end of the siding have been spiked. The siding will be removed. Amend page 100, MTP

(SW 35?/94, WN 46/94)

13.12.1994 **North Geelong - Fyansford**

On Tuesday, 13.12.94, the Train Staff and Ticket working between North Geelong "C" Box and Fyansford was abolished. The line will now be worked as part of North Geelong Yard. A special Master Key was provided to operate the safety points at Fyansford. The key is held in the Yard Master's Office at North Geelong. Amend page 21, MTP General Instructions. (SW 390/94, WN 48/94)

13.12.1994 **California Gully**

On Tuesday 13.12.94, California Gully Oil siding was reopened for traffic.

Until run around facilities are provided, permission is granted for two bogie vehicles to be propelled from California Gully to Bendigo during daylight only. The provisions of Rules 32 and 33, Section 10, Book of Rule are to observed. Amend page 14, MTP General Instructions. (SW 389/94, WN 48/94)

(20.12.1994) **West Tower**

Commencing forthwith, all train and vehicle movements into and out of "D" Balloon tracks must be governed by the Fixed Signals. "Short" shunting is prohibited. (SW 385/94, WN 48/94)

(20.12.1994) **Newport - North Shore, Construction of Standard Gauge Line**

It will be necessary for the test switch of all boom barriers along this line to be operated for vehicles traversing the Standard Gauge line. Until the track circuits are provided, it is the responsibility of the Operational Supervisor to inform the Signallers or Train Controller before operating the test switch and again after the switch has been restored. Should a Signaller or Train Controller become aware that boom barriers are operating and no Broad Gauge train is in the vicinity, they are to confer with the Operational Supervisor to ascertain whether a Standard Gauge movement is being conducted before communicating with the Signal Fault Centre. (SW 388/94, WN 48/94)

LETTERS TO THE EDITOR

Jim Black writes forwarding copies of the errata for the IRSE book "Railway Control Systems":

1. Reference is made to various speeds in Km/h in chapter 1. These were incorrectly converted:

Shown in Text as	Should be:
6.25 Km/h	16.0 Km/h
12.50 "	32.5 "
31.00 "	80.5 "
47.00 "	120.0 "

2. Page 50, right hand column, replace second paragraph with:

   The identity files include lists of all signalling functions by type. Only functions declared here are recognised by the data compilers. The identity files are:

TCS	track circuits
SIG	signals
PTS	points
ROU	routes
FLG	flags (latches/sub-routcs/sub-overlaps)
ELT	elapsed timers
QST	panel requests
BUT	signalmen's panel switches and buttons
IND	panel indications

3. Page 51, right-hand column, 19th line, substitute "and" for "or".
4. Page 57, above second paragraph, add heading "*Signal Output Data*"
5. Page 58, Fig 2.25, substitute for seventh and last lines of data:

```
UAE-BA f if UAD-CA f , UAD-BA f, TAE c \.
OBK-CA f if OAF-CB f, TBK c \ .
```

6. Page 53, Fig 2.19, substitute the following text:

```
/ PBK File - Buttons & key switches
/ First button list
_92                 / Length of button list
B5F s,    ^L5F      / Button 5 pushed as entr.
                    / - send request QXS5
B7F s,    ^L7F      / Button 7 pushed as entr.
                    / - continue at *L7F
B7FM s, =QXS7       / Button 7 pulled
                    / - send request QXS7
B9F s,    ^L9F      / Button 9 pushed as entr.
                    / - continue at *L9F
B9FM s, =QXS9       / Button 9 pulled
                    / - send request QXS9
... etc             / other items in list
$                   / End of list

/ Subsequent button lists
*L5F I5PB sf, _2      / Flash 5 entr. button
                      / for 15s maximum
     B9F s,  =QR5A    / But.9 pushed as exit
                      / - send request QR5A
     B13F s, =QR5B    / But.13 pushed as exit
$                     / - send request QR5B
*L7F I7PB sf, _2
     B9F s,  =QR7A
     B13F s, =QR7B
$

/ POD File
/ Entrance button steady indication data
if S5 clear bpull ( R5A s or R5B s )
then I5PB s         / Button lit if route set
else I5PB xs \ . / and button not pulled
```

7. The character "!" has been shown as "1" in Fig 2.20.
8. The data punctuation character "\" has been omitted throughout Figs 2.21 to 2.25.