SOMERSAULT
MARCH 1991
Vol 14, No 2.

SIGNALLING RECORD SOCIETY (VICTORIA)

EDITOR: David Langley, P.O. Box 8, Avenel, 3664.
Phone: (057) 96-2337 A.H., (057) 92-3288 B.H.

PRESIDENT & CORRESPONDENCE SECRETARY:
Jack McLean, 60 Kenmare Street, Box Hill North, 3129.
Phone: (03) 890-6764.
TREASURER & MEMBERSHIP OFFICER:
Colin Rutledge, P.O. Box 103, Seymour, 3660.
Phone: (057) 99-1277.

NSW GROUP LEADER: Neil Curryer, 20 Cooksey Close,
Waratah West, 2298. Phone: (049)
NSW GROUP SECRETARY: Bob Taaffe, 11 Deribong Place,
Thornleigh, 2120. Phone: (02) 481-9994.

Deadline for May 1991 issue is 21 April 1991.
NEXT MEETING: Friday, 15 March 1991.
VENUE: Uniting Church Hall, Hotham Street,
Mont Albert, commencing at 20.00 hours.

MINUTES OF FEBRUARY 1991 MEETING.

HELD AT: Fellowship Room, Uniting Church Hall, Hotham Street, Mont Albert.

HELD ON: Friday, 15 February 1991. Meeting commenced at 2015 hours.

PRESENT: Jack McLean, Wilfrid Brook, Peter Brook, Glen Cumming, Jon Churchward, Graeme Inglis, Alan Jungwirth, Keith Lambert, David Langley, Rod Smith.

WELCOME: Timothy Constable.

MINUTES OF PREVIOUS MEETING: accepted (Cumming/Smith)

BUSINESS ARISING: Glen Cumming will table a report on the incorporation of SRSV at the next meeting.

CORRESPONDENCE: David Langley had a letter from Bob Taaffe with the dates of SRSNSW rours including a tour on 18-19 October from Casino to Acacia Ridge.

GENERAL BUSINESS:
1. Glen Cumming had bought an incorporation kit and this was discussed.
2. Glen Cumming asked Alan Jungwirth about the forthcoming Show Day trip. Alan replied that it was a mystery trip - it was a mystery to him!
3. Rod Smith reported that the signalman at Menzies Creek has been equipped with a bicycle in order to operate the extended loop.

4. Rod Smith mentioned a report which stated that Bendigo C Box was not particularly important to preserve. It was mentioned that Castlemaine A, Beaufort and Eaglehawk boxes have been preserved.
5. Keith Lambert stated that the electric staff system will be replaced by Section Authority which is similar to Train Orders but is doen through a computer. The authority will be received via the Train to Base radio system.
6. Rod Smith reported that Glenrowan has closed for all traffic.
7. Glen Cumming reported that mechanical interlocking and signalling at Mount Gambier was removed in November 1990.
8. Rod Smith queried if goods trains ever originated at Albury (in the light of a recent article on H220). David Langley reported that in the early 1970s a goods train regularly originated from Albury at 6pm.
9. Jack McLean noted that in 1889 a head on collision occured at Creswick. The Maryborough train was in the platform and the Allendale train came down the hill. The signal was said to be clear. Jack thought that a white light was seen and thought to be the signal but subsequently turned out to be something else - a street light perhaps. The white light for all clear was changed to green in 1898 with the gradual increase of white lights.

SYLLABUS ITEM: Rod Smith showed an interesting selection of slides of his recent tour through Egypt, Bulgaria, Israel and Turkey.

NEXT MEETING: Friday, 15 March 1991. All welcome.

--oOo--

MINUTES OF MARCH 1990 ANNUAL MEETING

HELD AT: Uniting Church Hall, Hotham Street, Mont Albert.

HELD ON: Friday, 16 March 1990.

MEETING COMMENCED: at 2010 hours.

PRESENT: Jack McLean, Wilfrid Brook, Jon Churchward, Glen Cumming, Alan Jungwirth, David Langley, Andrew McLean and Colin Rutledge.

APOLOGIES: Peter Brook, Jim Brough, Graeme Inglis, Roger Jeffries, Greg O'Flynn, Andrew Waugh and Rob Weiss.

MINUTES OF 1989 ANNUAL MEETING: unavailable (Cumming/Rutledge)

PRESIDENT'S REPORT: In some ways we have had a good year. In others not so good. We have lost a pretty good secretary and treasurer. I have just rung Epworth Hospital and got an apology from Jim Brough. He says his cat is getting looked after.
I would like to thank the officers and members of the Society not only for things we expect them to do, but for the spontaneous way they closed ranks (as the military say) and very promptly filled gaps left by Stephen.
I do think it would be a good idea to get a new President who is a little less geriatric or elderly. Jungi there looks like Edward VII who had to wait until Queen Victoria died.
Thankyou once again.

TREASURER'S REPORT: tabled, discussed and accepted. (Jungwirth/Langley)

AUDITOR'S REPORT: deferred.

TOURS REPORT: The 1989 Show Day tour was successful covering signal boxes from Wangaratta to Seymour.

EDITOR'S REPORT: David Langley reported a good year with six issues of SOMERAULT (118 pages) being produced.

ELECTION OF OFFICE BEARERS: As there was only one nomination for each position, the nominees were duly elected. The positions are as follows:-
President - Jack McLean
Vice-President - Alan Jungwirth
Secretary - Wilfrid Brook
Treasurer - Colin Rutledge.
Editor - David Langley.
Jon Churchward was re-appointed as Auditor.

GENERAL BUSINESS: Nil.

MEETING ADJOURNED: until May in order that the Auditors report be fully discussed. The ordinary meeting then commenced.

--oOo--

MINUTES OF RE-CONVENED ANNUAL MEETING

HELD AT: Hotham Road, Uniting Church Hall, Mont Albert.

HELD ON: Friday, 18 May 1990.

MEETING COMMENCED: at 2010 hours.

PRESENT: Jack McLean, Wilfrid Brook, Jon Churchward, Glenn Cumming, Roger Jeffries, Keith Lambert, Andrew McLean and Greg O'Flynn.

APOLOGIES: Peter Brook.

AUDITOR'S REPORT: Jon Churchward tabled the Auditor's Report. The main account showed a loss for 1989 because of the late collection of subscriptions that year whereas in 1988 they were collected early in the year.
The Treasurer's Report was accepted (Cumming/O'Flynn).
The Auditor's Report was accepted (A.McLean/Jeffries).
Jon Churchward reported that no tax applies provided that the Society sells items to members only and that the only income is from the Society's own earnings. However, if more than $1,000 profit is made by selling to the general public, then the Society would have to pay tax.

MEETING CLOSED: at 2014 hours. The ordinary monthly meeting then commenced.

--oOo--

VICTORIAN RAILWAYS

SIGNAL AND TELEGRAPH DIVISION JULY 1957

BRIEF DESCRIPTION OF THE V.R. SIGNALLING SYSTEMS

The following paper serves to give readers an idea of what the signalling system in Victoria was about seen through departmental eyes. Future readers of this journal may gain an insight into the "way it was" especially in the light of the great upheaval that has taken place in the last fifteen years of the 20th century.

It is to be expected that a railway as old as the Victorian Railways, whose centenary was celebrated in 1954, should have two signalling systems. These may be described as MANUAL signalling and POWER signalling (more commonly [but incorrectly - Ed] called Automatic signalling.

During the rapid expansion of the railways in the nineteenth century, manually operated signalling apparatus was the best available at the time and was suited to the type and speed of trains, and to the density of the traffic operating then. It was installed extensively throughout the state. Even in those days it was difficult to obtain competent operating personnel and as no satisfactory alternative to 'train operation by signal indication' was available, a pension system was offered to attract personnel to work the railways including the manual signalling.

MANUAL SIGNALLING

This signalling is essentially mechanical in nature. Two position lower left-hand quadrant semaphores operated by a wire pulled by a lever and restored to stop by a weight to safe guard against a broken wire, are used.

Home and distant signals are used as running signals on passenger lines and disc signals for shunting and on goods lines.

A Home signal has a square ended red arm with a white stripe near the end. In the horizontal position, and by exhibiting a red light by night, it indicates STOP. When tilted to an angle of at least 45 degrees, and exhibiting a green light by night, it indicates PROCEED.

Where a line leads to several roads or platforms, a bracket signal or gantry is used. A separate signal arm is used to apply to each (platform) road. This signalling is known as ROUTE signalling because each arm describes to the driver of the train the route he will take. They are read in order from top to bottom and from left to right.

At a large station, a driver will see one arm at proceed and possibly as many as twelve arms at stop. This is not considered to be a desirable state of affairs.

Distant signals have a fish tailed shaped end on a yellow arm with a similar shaped black stripe. In the horizontal position, and exhibiting a yellow light by night, it indicates DANGER. Drivers are required to stop at this signal [?? - Ed] unless they can see that the line in front is clear but must be prepared to stop short of any obstruction or at the home signal.

A distant signal is located not less that the length of the longest train on the line from the home signal. When tilted to an angle of at least 45 degrees, and exhibiting a green light by night, it indicates PROCEED [considering the 'danger' aspect when horizontal I would have thought that 'all clear' was more appropriate - Ed].

At a junction, the distant signal cannot be operated when the points are set for a branch [or diverging - Ed] line but it is operated for the fast or main line. The distant signal cannot be placed to proceed unless all the home signals within its interlocked station show proceed. Thus a driver passing a distant signal at

danger must be prepared to stop at the next home signal or any following home signal at that station, but when passing it at proceed he can expect the line to be clear to the distant signal [? - Ed] at the next station. Home signals protecting level crossing gates between stations, terminal working and emergencies excepted. It will be appreciated that the distant signal is therefore the most important signal in the Manual Signalling System.

POINTS AND MECHANICAL INTERLOCKING

Rods are used to move the POINTS. Other roads are used to operate FACING POINT LOCKS to secure the points in the full normal or reverse positions. LOCK BARS 45 feet (13.7m) long are mounted along and just below the head of the rail. To unlock the points, the lock bar must be moved through an arc which passes above the top of the rail; thus when a train is present, the unlocking and moving of the points under a train is prevented.

Attached to facing points are MECHANICAL DETECTORS which prevent the signal wire being moved unless the points are locked in the correct position.

Levers are mounted in an INTER-LOCKING MACHINE and a route is established by moving the points to the required position, locking them and clearing the relevant signal. The mechanical locking between levers ensures that the route is properly set up whilst opposing and conflicting movements are prevented.

It will be realised that this system of signalling has its limitations, for example, when a signal lever is restored to its normal position, the mechanical locking is released and the route is held by the train engaging the lock bars near the points.

It is for this reason that signal levers must not be restored until the train engages the points. This system is slow and it will be appreciated that for dense traffic a considerably faster and safer system is desired.

In the days when manual signalling was developed, the electric telegraph was still in its infancy. Instruments were developed specially for railway use. The working of trains on sections of double line between signal boxes is done by a system of bell codes on WINTERS BLOCK TELEGRAPH instruments. The signalmen at each end of the section confer by bell codes to admit a train to and clear it there from. Entries are made in the TRAIN REGISTER BOOK to inform the signalman on his train movements and responsibilites.

To conform to the requirements of the Board of Trade and later the Ministry of Transport, a token system is used for working trains over sections of single line. The Webb and Thompson ELECTRIC STAFF instruments, which superseded the Tyers ELECTRIC TABLET instruments, are still used for this purpose. These are also used in conjunction with the bell codes and train register book.

On both double and single lines worked under the foregoing systems, it is most important that the signalman view the white disc or red tail light placed on the rear of the train in order to know that the train is complete. Numerous ideas have been tried to prove the completeness of a train including magnetic devices but none have been successful excepting the track circuit developed in America in 1872, which will be referred to later.

The Rules and Regulations for manual signalling are of necessity restrictive as the human element enters so largely into its operation.

POWER SIGNALLING

Just prior to World War 1, the important decision to electrify the Melbourne suburban railways had a profound effect upon the signalling. The main problems created by electrification were the difficulty of seeing signals due to the overhead structures, the need to reduce the size of train crews and the provision of signalling suitable for dense rapid traffic with a reduction in the total number of signalmen.

About this time, the Rudd-Rhea report by Engineers of the Pennsylvanian Railroad of U.S.A. regarding weaknesses in their signalling system and recommendations to overcome them, offered a solution to the problems of signalling an electrified railway with overhead structures. (For obvious

reasons this report was not made public until about 25 years later.) The proposed system of signalling was later adopted as the American standard.

It consisted of SPEED signals each comprising not more than three arms mounted one below the other. These are three position semaphores operating in the upper left hand quadrant.

On the Victorian Railways the third arm is replaced by a subsidiary light normally extinguished. The arms are motor driven and controlled by track circuits.

TRAIN STOPS

In the suburban area, all running signals are provided with train stops which are designed to bring the train to rest if the driver runs past the signal indicating stop.

The train stop is located at the side of the track and its main feature is an arm raised when the signal is at stop and lowered when it is at proceed. In the raised position the arm is about four inches (100mm) above rail level and engages a trip-cock lever located on the train and connected to the compressed air braking system.

If a train passes the train stop when the arm is raised, the trip-cock lever is rotated, the brake pipe air pressure is destroyed and the brakes applied. Thus it is possible to increase the safety of the train despite the elimination of a man from the driving compartment of the train.

TRAFFIC REQUIREMENTS

The first suburban line to be electrified was the Essendon line which forms part of the interstate line connecting Melbourne with Sydney. In addition to carrying multiple unit rolling stock for suburban traffic and for the Melbourne Cup race traffic requiring up to 40 trains per hour, it carries fast interstate traffic comprising passenger, live stock and goods trains.

The speed signals provide four aspects and at special locations five aspects for this diversity of traffic. The signalling installed on this section nearly thirty five years ago has practically without revision carried all this traffic.

SIGNALLING ASPECTS

Each speed signal includes the indications of a distant signal but being controlled by track circuits the driver does not have to be prepared to stop at it when it exhibits a warning indication.

The signals are either HOME signals or AUTOMATIC signals.

A home signal has square ended red arms with a white stripe near the end. In the horizontal position and exhibiting two red lights, one directly above the other, it indicates stop.

Home [or Absolute - Ed] signals usually govern interlocked points ahead or entry to a single line section and, except under certain emergency conditions, must not be passed in the stop position without a written order indicating that the signal is out-of-order.

Automatic [or Permissive - Ed] signals have pointed red arms with a similar shaped white stripe near the end. In the horizontal position and exhibiting a red light out of vertical alignment or staggered relative to another red light, they indicate stop.

Automatic signals usually apply to sections of track without interlocked points and may be passed in the stop position after the train has been brought to rest for 10 seconds. Provided the driver can see that the line ahead is clear he can proceed with caution prepared to stop clear of an obstruction.

Proceed aspects of home and automatic signals have the same meaning, viz:-

* - Upper arm or light indicates proceed at normal speed as laid down in the working timetable for the particular locality.
* - Lower arm or light indicates proceed at medium speed or 25mph (40km/h)

Each arm exhibits a green light when the arm is in the vertical position, and a yellow light when 45 degrees above horizontal.

Semaphores are now superseded by colour light signals which exhibit the same indications by day and night.

The following aspects indicate speeds:-

Indication	Meaning	Interpretation
Green above Red	Clear Normal Speed	Proceed at normal speed, next signal at proceed.
Yellow above Red	Normal Speed Warning	Proceed at normal speed, prepared to stop at next signal.
Green below Red	Clear Medium Speed	Proceed at 25mph, next signal at proceed.
Yellow below Red	Medium Speed Warning	Proceed at 25mph, prepared to stop at next signal.

When it is necessary for a driver to change from Normal to Medium speed, a Yellow above a Green aspect indicates Reduce to Medium speed meaning proceed at normal speed prepared to pass next signal at 25mph.

SUBSIDIARY AND SHUNTING SIGNALS

A yellow light below the two red lights on a home signal permits a movement into an occupied section at Low Speed of not more than 10mph prepared to stop short of an obstruction. The arm on the train stop is lowered after the approaching train has been brought to rest.

Dwarf signals are used for shunting and are of the banner type with a red arm on a circular white disc, the arm being horizontal when the signal is at stop, at 45 degrees when indicating warning and 90 degrees when at clear.

Dwarf signals show purple, yellow or green at night. Purple is a short range signal distinctive from hand lamp signals used by employees, colour light signals are now used in place of the motor driven banner type.

COLOUR LIGHT SIGNALS

Colour light signals operate faster than semaphores and have an efficiency that permits their use in bright sunlight. In order to prevent phantom indications or aspects being given by extraneous light being reflected by the lamp bulb and filament when it is extinguished, searchlight type colour lights are used at localities facing east and west.

Multiple lens colour light signals are used at localities essentially facing north and south. When used as subsidiary or shunting signals, they are fitted with spreadlight lenses which give a wide beam of light suitable for short range indications.

In the suburban area, most lines are signalled for a maximum speed of 50mph (80km/h) and for a capacity of 20 trains per hour. In the country, the maximum speed is 70mph (115km/h).

POINTS

Points may be rod operated but when motor operated they can be operated over considerable distances from the signal box.

The point mechanism unlocks the points, moves them to the desired position and relocks them. Detection circuits are provided to prove that the points are properly set and locked. Operating circuits are designed so that extraneous current will maintain the points in a locked position.

APPARATUS AND CABLE RUNS

Transformers, relays and other signal control apparatus are located along the track usually near the signals.

2200 volt cables for the power supply and 110 volt signal control wires having high grade insulation are run in fibrous cement trunking mounted on concrete or rail pegs.

To reduce damage by breakages and fire, steel relay boxes and concrete troughing at ground surface lavel are now being installed.

SIGNAL BOXES

Signal boxes are provided only when it is necessary to set up diverging or converging routes.

The provision of track circuits makes it possible to provide an

illuminated track diagram for the guidance of the signalmen.

They also make possible, in addition to the interlocking provided in a manual signalling interlocking machine, such electric locking of levers as APPROACH LOCKING which prevents a signal lever being placed to normal and the points being moved ahead of an approaching train.

SECTION LOCKING to hold the route after the train has passed the signal and the signal lever has been restored to its normal position.

ROUTE LOCKING is used on both direction lines in a station yard which requires a pair of points to be released early if the train moves in one direction but to keep them locked if the train movement is in the opposite direction.

When the points and signals are electrically operated, control panels can be used and the signalman relieved of considerable physical effort. In addition it is possible for him to exercise control over an extended area.

AUTOMATIC OPERATION OF POINTS

At St Kilda and Port Melbourne the nature of the train movements is pure repetition of the one class of traffic and the points and signals work automatically.

REMOTE CONTROL OF POINTS

At several junctions, points and signals are remotely controlled from signal boxes at adjacent stations.

WHAT OF THE FUTURE

With the increased wage rates and the introduction of the 40 hour week, along with paid vacations, the annual wage for a signalman or gate-keeper around the clock every day, at a single signal box or gate cabin totals about 4,000 pounds. Signalling will therefore be of increasing importance to enhance safety and obviate expenses in railway operation by:-

1. Consolidation or combining of signal boxes by using the principles of remote control of points and signals,
2. Extending the same principles to long sections of line, points and signals at wayside stations are placed under the control of one Train Controller. The factors which make this development possible are:-
   a) Interconnection of circuits at field locations to accomplish safety, instead of using mechanical locking between levers,
   b) the use of coded impulses of current between control office and wayside stations to minimise the line circuits required to send out controls and bring back indications.
3. Reducing delays at level crossings by the introduction of automatic boom barrier and flashing light signals. The interlocking of gates with signals often caused delay to trains because with increased automobile traffic, signalmen have trouble operating the manual gates and trains are slowed down at warning or stop signals. With the development of the boom barriers worked automatically by track circuits, delays to trains and automobiles are reduced to a minimum.
   (At Toorak Road crossing, Tooronga, the time from the commencement of the advance warning of the operation of the boom barriers until their ascent after the passage of a train is 45 seconds.)
4. Automatic switching and braking of trucks during classification operations in marshalling yards.

hus extension of the modern Tnalling systems will:-

sigsecure more efficient utilisation
1. of diesel locomotives,
   reduce train time between terminal
2. without further increases in speed,
   expedite operations in marshalling
3. yards, and
   improve effeciency and reduce
4. operating expenses for level crossing protection.

All these things are possible and the present limitations are technical staff amd manufacturing facilities. Every possible effort is being made to overcome both of these.

--oOOo--

SOME NOTES ON ELECTRIC STAFF RULE 16a (VICTORIA)

by Jack McLean.

Back in the thirties, there were comparatively few buses and cars, and by todays standards, lots of trains. When untoward incidents happened to trains and a line was completely blocked, the railway had evolved ways of maintaining the service within its own resources.

On both double and single lines, the arrangements for carrying on the service when a line was completely blocked by a derailed train, a washed out bridge or something similar, was to back in a train on both sides of the obstruction and then allow the passengers to walk, and goods to be man-handled, between the two trains.

Some years back, when I first heard of possible changes to this arrangement, I remember discussing the rules with the late Frank Breen, who was then the Safeworking Superintendent. As I remember, he said the arrangement had never been used for the transfer of passengers in his time although it must have been used when work trains or breakdown trains needed to work on both sides of an obstruction. We were concerned for the "little old lady" who had detrained from one train and then walked past the obstruction (where there may have been death or injuries, and where there certainly would have been damage) before she climbed into the other train, we thought it would have reduced her enthusiasm for train travelling for a while.

And yet, what was the alternative? In the days of few road motor vehicles (or none) and few good roads, not much.

The process of working trains towards an obstruction had been in use for over a hundred years without much alteration. It was probably used between Werribee and Little River on 2 April 1884 and the following days, and is shown in the Rules for 1884.

Under the Electric Staff system since 1907, it was described in Rule 16A, parts of which are included below.

Since the two man crew arrangements have been in force, the old ways have been changed and perhaps they should be described before they get forgotten.

16A. (a) If an accident or obstruction should occur and the traffic is likely to be stopped for a considerable time, special arrangements must be made for working the trains to and from the tablet or staff station on each side of the point of obstruction.

(c) Should the obstruction be caused by a disabled train, the tablet or staff must be used to work trains between the point of obstruction and the tablet or staff station from which the tablet or staff was issued, and, on the other side, the traffic must be conducted by a pilotman in accordance with the following instructions:-

In one of the many boxes in the J.C.M.Rolland collection in the Latrobe Library is a packet of "Items of Information" issued between 1930 and 1936, about 45 pages of them and I am delighted to know that they have been preserved.

One of them concerns a football special which became derailed between Maryborough and Carisbrook on its way to the match at Kyneton on Saturday, 16 July 1932. It was not a good day for football specials as later in the day another one was derailed at Lubeck on its way home from Ararat.

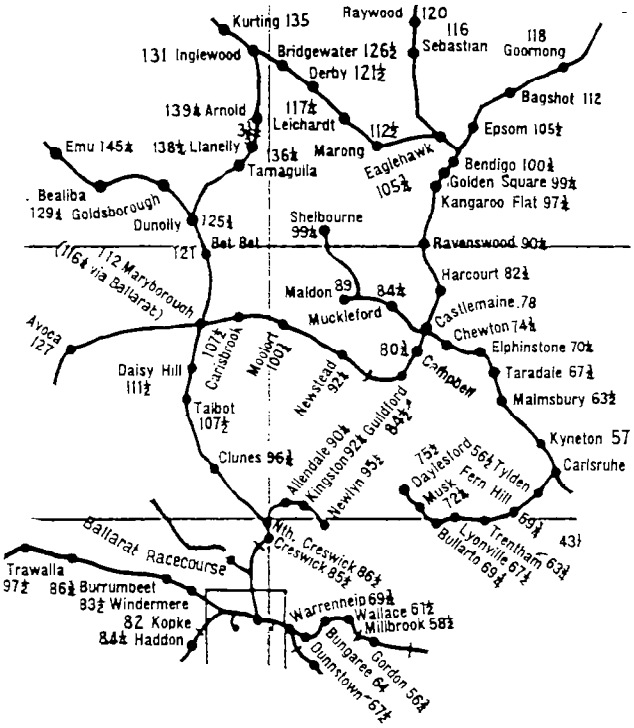

1. Location Sketch.

The timings of the Maryborough to Kyneton special were shown in Special Train Notice S 2001/32 (which has not yet come to hand) and were for a 12.35pm train out of Maryborough. It was altered to 12.40pm for some reason, perhaps to enable some of the team to count the cash and shut their shops after Saturday morning trading.

I can imagine it in Dock road A at the Dunolly end of the Maryborough station (Diagram 2), where it waited to cross the 10.48am Mixed from Castlemaine to Donald. The special had loco D3 678, 38Z (a six wheel van), 45APL, 8BV and 25C. The Z van was to minimise reversal time at Castlemaine. My impression of what the train looked like is shown in Diagram 3. The load was given as 4/100 tons and it carried 66 passengers.

2.
Portion of Litho No 5'34.

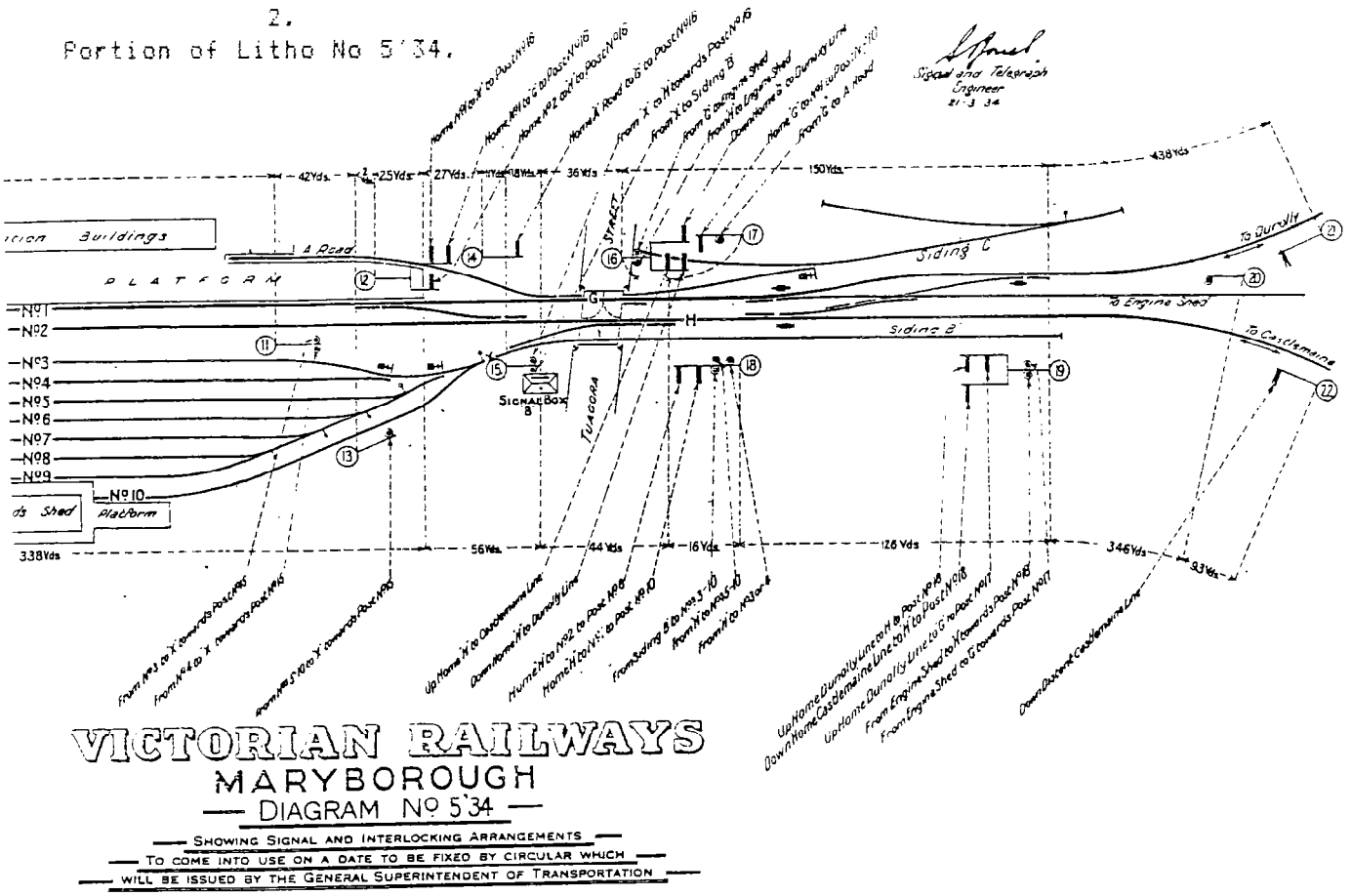

With Frederick Nunnely Palmer (Driver), J.Williams (Fireman) and Thomas Vincent Walsh (Passenger Guard), the train seems to have left Maryborough on time and I can see it as it passed Maryborough B signal box at the Tuaggra Street gates where fireman Williams leaned out to pick up the large electric staff for the section to Carisbrook possibly from signalman Andrew Johnson.

The journey lasted about eight minutes. At about 12.48pm on a section of straight track at about 109 miles 11 chains (175.6km) the rear axle of the tender broke, the tender became derailed and travelled some distance before the train was stopped. The permanent way was badly damaged.

As the whole of the train was screw-coupled, the tender took with it the Z van whose body was turned on its side on the upside of the line while the underframe fell the other way. Passengers said they saw "wheels hurtling away" and so perhaps were prepared for the sudden stopping of the train. In addition to the tender and the Z van, all wheels of the APL car and the leading wheels of the BV car were also derailed.

One newspaper described how a passenger in the APL car was caught by the coat sleeve and pinned to the wall

3. Diagram showing probable appearance of Football Special.

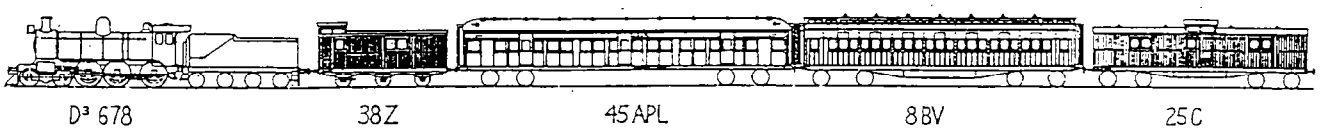

by the buffer of the Z van, which had come through the wall. Another paper named the "ex-footballer" and gave the further detail that he was in the lavatory, the door of which had to be broken to free him.

As the derailment was only about a mile and a half from Carisbrook, I have no doubt that someone, probably the guard, went to that station and informed Maryborough. In any case, eight motor vehicles and one lorry were hastily requisitioned and took the party to Kyneton where the football match was delayed for 15 minutes.

The provision of Rule 16A which deal with a train becoming a total obstruction of a line, were then brought into force and it is interesting to note how closely the rules seem to have been followed, judging from the information in the "Item of Information".

From the Item and also from newspaper paragraphs, and using working time tables I have, I have drawn a graph which is shown here, and will be referred to from time to time. I will also include extracts from the Rule, where they apply.

It seems likely that when the guard went forward to Carisbrook after "putting the driver in charge of the obstruction" he took with him the written order of the driver stating that he would not allow his train to be moved until relief arrived. This order would later be used to institute pilotworking on that side.

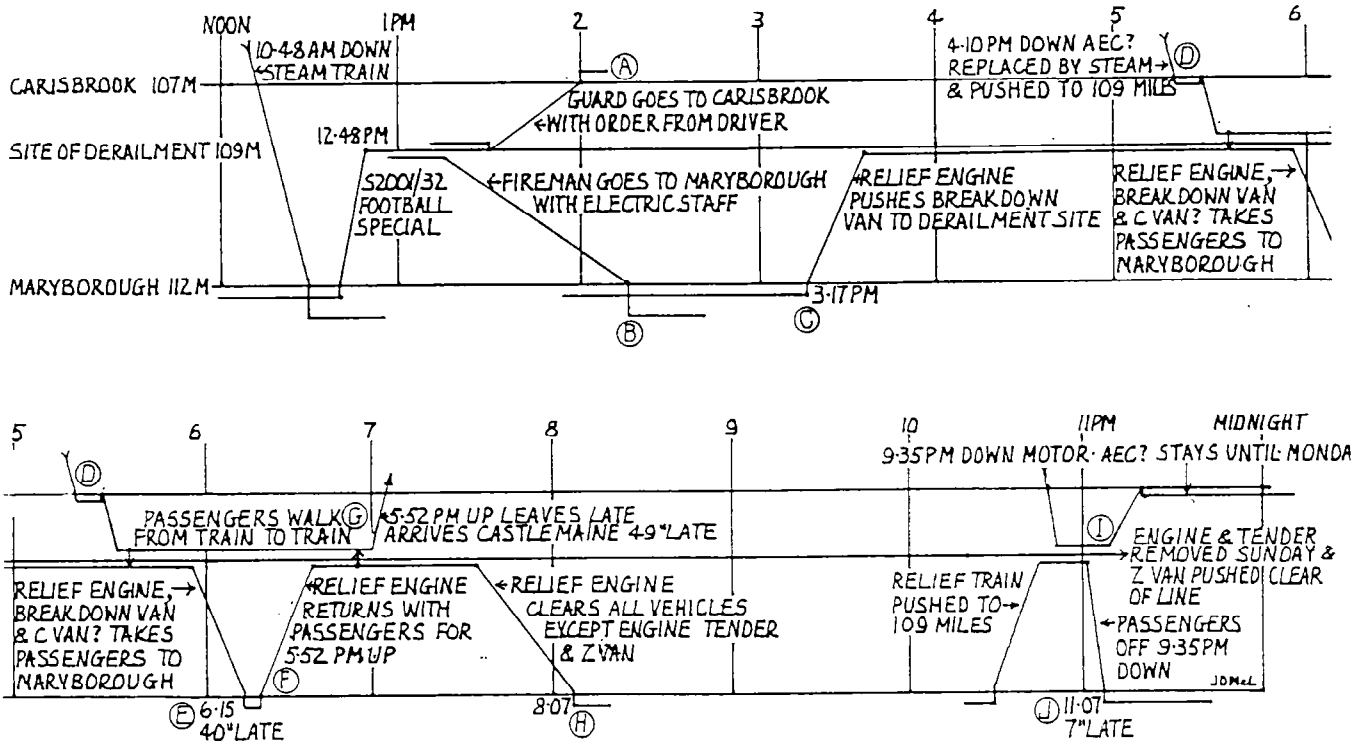

4. Graph showing probable movements of trains.

(i) The guard must put the driver in charge of the point of obstruction, and the driver must then give the guard a written order addressed to the station-master at the tablet or staff station in advance, stating the point of obstruction and intimating that he will not allow the disabled engine or train to be moved until the relief train or engine arrives. The guard must then proceed to the tablet or staff station in advance and hand the written order to the station-master, advising him of what has occurred.

Relief arrangements would obviously come from the Maryborough side and the pilotworking on the Carisbrook side would not be needed until the down passenger train was due. The driver was required to send his fireman to Maryborough with the electric staff for the section. The fireman could have walked the 3 miles of line but I think it more likely that he would have gone to Carisbrook with the guard and from there he could have ridden to Maryborough in a road motor. The fireman's duties are laid down in sub-paragraph (iv):

(iv) The driver when put in charge at the point of obstruction must hand the Tablet or Staff to the fireman and instruct him to take it back to the Tablet or Staff Station from which it was issued, to work trains between that station and the point of obstruction until the line is clear.

(e) In no case of obstruction away from a Tablet or Staff Station must a Tablet or Staff be restored to the instrument at either end of the section until the section is clear, except as laid down in Rule 16.

Before either the guard or the fireman left the obstruction, they would have placed detonators on the line in both directions from the disabled train.

(vii) The guard and fireman of the disabled train when proceeding to the advance and rear Stations respectively must place detonators on the rail, as prescribed in Regulation 239. On their return they will be held responsible for the protection of the obstruction until relieved.

Either way, the fireman would have reached Maryborough at about 2.15pm and by that time the relief train would have been assembled following the message sent from Carisbrook. As the breakdown van would need to be as close to the site as possible, I think it would have been pushed into the section and the authority for this train (and for others while the obstruction remained) to enter the section, would have been the electric staff taken to Maryborough by the fireman. In addition, the driver of each train entering the section would have signed for an order describing the position of the obstruction (sub-paragraph vi) and the detonators would indicate when they were closely approaching it.

(vi) Drivers, when proceeding to the point of obstruction with the staff, must be handed a written order stating the position of the obstruction; the driver must sign for the order on a copy held by the signal man.

The relief train left Maryborough at 3.17pm and was accompanied by Mr. J.S.O'Haire, Acting District Superintendent (Maryborough was the district headquarters in those days), Mr. J.S.Noonan, District Rolling Stock Superintendent, as well as the Depot Foreman, the Leading Hand Fitter and the Road Foreman.

At around 5.30pm, the 4.10pm down passenger train from Castlemaine should have been approaching Carisbrook. It would normally have been a rail motor, probably a four wheeled AEC, but in order to avoid it having to reverse all the way to Castlemaine, it was replaced by a steam train, the engine of which would return tender first.

On arrival at Carisbrook, the steam engine would have run round its train and made ready for the return trip to Castlemaine, and then using the Driver's Order as authority, it would have pushed the train into the section towards the obstruction.

The pilotworking arrangements would then have been completed in accordance with the remainder of sub-paragraph (i) and sub-paragraphs (ii) and (iii).

The Station-master must then arrange for three or more as may be necessary, of the printed forms provided for the purpose of establishing working by Pilotman during obstruction (see speciman form at the end of this Rule), to be filled up,

one of these, signed by the Pilotman, he must deliver, in the presence of the Pilotman, to the signalman in charge of the Tablet or Staff Station where Pilotworking commences; the second must be retained by the Pilotman and the third must be conveyed by the Pilotman with the relief train (the Driver of which must hold the written order, which must be handed to him by the Station-master) to the Driver in charge of the point of obstruction.

(ii) On arrival at the point of obstruction the Pilotman must collect and cancel the order held by the driver of the relief train, attach it to his - the Pilotman's Form - and complete the arrangements for working by Pilotman.

(iii) The Pilotman must wear a distinctive badge, which until the regular badge can be obtained, must be a red flag tied around the left arm, above the elbow. So soon as he is satisfied that the arrangements are understood, trains may be allowed to go on to the single line under the control and by the permission of the Pilotman.

On the Maryborough side of the obstruction, the relief train would have by this time been attached to the C van and even perhaps the BV car and these vehicles probably formed the passenger train for the remainder of the journey to Maryborough. The passengers would have walked past the derailed vehicles and torn up track. The relief train arrived at Maryborough at 6.15pm, only 40 minutes late. The relief train as substitute passenger train then retuened to the obstruction as the 5.52pm up and maybe left at 6.25pm, 28 minutes late.

It was, I suppose, undesirable to have two groups of passengers walking past the obstruction at the same time (in opposite directions); they would have been easier to handle at Maryborough. The 5.52pm substitute would have been pushed into the section, its passengers would have walked past the obstruction and joined the waiting steam train on the opposite side. The latter arrived at Castlemaine 49 minutes late and caused a delay not only to the Melbourne connection but also to a Bendigo-Castlemaine football special which was following.

Around 7.30pm, work at the obstruction was suspended for the night and the relief train left for Maryborough where it arrived at 8.07pm. All vehicles had by this time been re-railed except for the tender and the Z van.

The next passenger service was the 9.35pm down ex Castlemaine running as a rail motor. This was probably the AEC which stopped at Carisbrook, was escorted to the obstruction by the Pilotman and returned empty in reverse to Carisbrook where it stayed for the weekend. It ran empty to Maryborough on Monday morning to resume its normal service.

From Maryborough at about 10.30pm a passenger train was pushed to the obstruction where it picked up the passengers off the rail motor and arrived Maryborough at 11.07pm, only seven minutes late.

My public time table for this year shows that on Saturdays there were three passenger services each way between Castlemaine and Maryborough. In addition there were several goods trains in both directions, the traffic from which was diverted via Ballarat and also via Inglewood.

Leaving Maryborough at 8am on Sunday, the relief train took workmen back to the re-railing task. During the day, the tender was re-railed and the parts of the Z van pushed clear of the line. The complete engine was hauled from the site at 6.57pm and arrived Maryborough at 7.25pm. The temporary arrangements had then to be cancelled.

(d) When the line is again clear, no train must be allowed to pass the point where the obstruction existed without the tablet or staff; the pilotman must accompany the first train carrying the tablet or staff to the tablet or staff station to which the train was proceeding at the time of the accident, or back to the station from which it had started. After the driver has given up the tablet or staff to the signalman, and the pilotman has withdrawn his arrangements for pilot working, ordinary working may be resumed.

The line was again clear and was patrolled by the Dodge Car which took the electric staff AND the pilotman through the section, as the pilotman was probably a Carisbrook man. Regular

working could then be resumed.

And on the Monday morning the "Item of Information" shown here found its way onto the desks of those concerned at Spencer Street.

"Item of Information"

MARYBOROUGH
CARISBROOK
16-7-32.

S 2001. The 12.35pm football special Maryborough to Kyneton altered to 12.40pm, engine 678 D3 Driver Palmer, Fireman J.Williams, Guard T.V.Walsh load 100 tons,, consisting of 38Z, 45APL, 8BV and rear van 25C became derailed in section on straight track at mileage 109-11 at about 12.48pm owing to flaw in trailing tender axle on engine. Train travelled about 25 chains after derailment and permanent way badly damaged. All wheels of engine tender derailed and only one pair wheels under tender. Body Z van turned over on upside of line and the underframe of Z van on rails on down side of line. All wheels of APL car derailed and leading bogie wheels of BV car derailed. C van OK. Z van totally disabled, main line blocked, 66 passengers, no one injured. Mr. Noonan D.R.S.S. in charge at scene of mishap. Breakdown van departed Maryborough at 3.7pm. Cars rerailed and all of train except engine and Z van hauled into Maryborough at 8.07pm. Breakdown van departed Maryborough at 8am on Sunday, 17th inst. and rerailed tender of engine and Z van removed clear of line. Track made good and everything OK for normal traffic Monday. Casualty left scene at 6.57pm. 17th and arrived Maryborough 7.25pm. Dodge car traversed section and returned pilotman home to Carisbrook and arrived back at Maryborough at 8.15pm. The football team and passengers were conveyed by road to Kyneton and return by eight motor cars and one motor van. The 4.10pm down and 5.52pm up were run as steam trains to point of derailment where passengers etc., were transferred. Passengers etc. on 9.35pm down rail motor transferred to relief steam train. The rail motor was held at Carisbrook until Monday morning and then worked to Maryborough to take up running of 8.59am up rail motor. Passengers on 4.10pm down arrived Maryborough 40 minutes late and 9.35pm down arrived Maryborough seven late. 5.52pm up arrived Castlemaine 49 minutes late and in consequence the 6.50pm up Bendigo passenger was delayed 38 minutes and arrived Spencer Street 26 minutes late. The 7.10pm up Bendigo-Castlemaine football special was blocked 11 minutes. The 4.45pm up goods delayed 40 minutes. The 4pm and 6.15pm up goods also the 8.15pm and 10.20pm down goods between Maryborough and Castlemaine were cancelled. Perishables and ordinary loading off Mildura line were diverted to Ballarat by 4.20pm and 6.15pm goods and connected with 1am via Geelong to Melbourne. The perishables and empty louvres for Mildura line on 12.40pm down goods were sent on to Bendigo and via Inglewood to Maryborough departing 11.53pm.

All this took place more than 53 years ago and there have been numerous changes since then.

All of the railwaymen have at least retired, many of them to the Great Terminus in the Sky. Steam engines are only seen on fan specials. None of the vehicles in the story are still in service although a couple have been preserved in museums.

Although the magnificent Maryborough station building still stands, the two signal boxes have been replaced by a relay interlocking in the Station-master's office and the interlocked gates are no longer needed since the underpass has been built.

Carisbrook is no longer a crossing station, in fact, the line to Castlemaine is one section of staff and ticket and carries perhaps one goods train a day each way.

Along with all these casualties is Electric Staff Rule 16A. Radios have made possible the running of goods trains with "two man crews" and so the rules have been re-written to take this into account.

Instead of pilotmen being used at the side opposite to the one where the electric staff is authority, a Train Order is now issued by the Train Controller, as shown in portion of the current rule.

16A. (a) If an accident or obstruction should occur to a train, the Driver must immediately advise the Train Controller by means of the Train

Radio. The Train Controller must advise the Driver, Second Person, Locomotive Assistant or Guard as to where the staff should be taken. In the event of the Train Radio not being available, the Second Person, Locomotive Assistant or Guard must take the staff to the most convenient end of the section. Arrangements must be made for the working of trains between the obstruction and the Staff Station on one side by means of the Staff.

(b) Should it be necessary to work trains between the obstruction and the Staff Station on the opposite side, the following steps must be taken:-

(i) Arrangements must be made for the Driver of the obstructed train to complete a Driver's Relief Order.

(ii) The Driver of the obstructed train must transmit the Driver's Relief Order to the Train Controller by means of the Train Radio.

(iii) Before entering the Section on that side of the obstruction, the Driver of the Relief train or Locomotive must be in possession of a Train Order.

--oOOo--

T.R. 9* [Form referred to in Sub-clause (ii), Clause (c), Rule 16A, Appendix 7.]

VICTORIAN RAILWAYS.

ELECTRIC TRAIN TABLET OR ELECTRIC TRAIN STAFF BLOCK SYSTEM.

Working of Single Line by Pilotman during Obstruction.

This Form must be filled up and used whenever it is temporarily necessary, owing to obstruction on a Single Line, to work the Traffic by Pilotman.

_____ Station,

_____ 19____

To_____

The Single Line between_____ and_____ being obstructed, the traffic between_____ and the place of obstruction will be worked by Pilotmen in accordance with number 16A of the Rules for Train Signalling on Single Lines of Railway worked on the Electric Train Tablet or Electric Train Staff Block System.

_____ will act as Pilotman, and no train is to be allowed to pass on to the Section where the obstruction exists **unless he is present and rides in the Operating Cab.**

This order is to remain in force until withdrawn by the Pilotman.

(Signed)_____

* Noted by_____ Station or Box_____

Time_____

* Noted by_____ at place of obstruction. Time_____

Noted by_____ Pilotman.

*** These Signatures must only be made on the copy held by the Pilotman.**

At least six of these Forms must be kept in a convenient place at each Tablet and Staff Station, so as to be available at any moment night or day.

A copy of this Form must be delivered to the Signalman in charge of the Tablet or Staff Station where the Pilot-working commences, the second must be retained by the Pilotman, and the third must be conveyed by the Pilotman with the Relief train to the Driver or other person in charge of the point of obstruction. If there is an intermediate Signal-box which is not a Tablet or Staff Station, the Signalman or person in charge must be supplied with a copy of the Form.

In the event of a Station-master himself acting as Pilotman, he must address and give a copy of the Form to the person he leaves in charge of his Station.

Station-masters receiving this Form will be held responsible that the Inspectors, Foremen, Signalmen and others concerned at their Stations are immediately made acquainted with the circumstances, and are instructed in their necessary duties.

On the other side of the obstruction the Line will be worked by the Tablet or Staff, as directed in Rule 16A.

LETTERS TO THE EDITOR
from Andrew Waugh

Dear David.

With reference to John Sinnatt's excellent series of articles on level crossing protection, I enclose the following notes which have been taken from the Station Books (Scrap books which were kept by the Safeworking Office from about 1920 until the 1970's) which are located in the Melbourne University Library.

The Wig Wag at Lower Plenty Road, Rosanna, was due to go into service on Wednesday, 10 March 1926 (A 643/26). Examination of the books for the North East might clear up the dates of installation of the two Wig Wags in that district.

The old style Wig Wag at Amess Street, North Carlton, was due to be replaced by the "three position" type on Monday, 1 December 1924 (A 2858/24). This notice refers to WNs 15 and 31 for 1924 (describing the old type) and WN 50/24 (describing the new type). John's article mentions that there were three old-type Wig Wags. The possible locations for these were Point Nepean Road (Nepean Highway) Mornington, Hastings Road Somerville and the two at Colac. These were all installed in 1924. (The last to be installed in 1924, at Launching Place, was a three position Wig Wag - or so says WN 1/25.) The Station Book makes no mention of converting the Mornington or Somerville Wig Wags si it is possible that these were always of the three position type (or, the notice might not have been pasted in, or has since fallen out...). Examination of the book for the South East district might also answer this question.

One final note on John's article. The Victorian Government Gazette of 20 July 1904 (p2267) noted that G.R.Bald and Co. had been awarded a contract worth 152 pounds, one shilling and fourpence for the supply of six sets of automatic crossing bells, relays and batteries. These were presumably, the "Chicago Bells" referred to in Part 3. If this is so, where did the other two go? One might have been at Colac. The PRO file on level crossing elimination starts off with some details from a Coroners Inquiry into the death of a Mr. Edward Lidgerwood at Colac East on 25 July 1923. He had driven his car in front of a train. The level crossing was protected by a bell, audible for at least 150 yards. From the date, this suggests that this too was a Chicago Bell. (As a footnote, the solicitor representing the railways was one C.D.Gavan-Duffy.

Weekly Notice, No. 15 April 8, 1924

AMESS STREET LEVEL CROSSING, NORTH CARLTON.

Wig Wag Signal.

10 On 27th March the Wig Wag Signal described in Instruction 15 of Weekly Notice 37/23 was replaced by a three-position type of Wig Wag Signal which works as shown hereunder.

Whenever a train is approaching in the vicinity of the Level crossing the Warning Indication will be given by a swinging Red Disc by day and a swinging Red Light by night and the ringing of a loud sounding gong. As soon as the train clears the crossing the Disc or Light is concealed behind a shield and the Bell ceases to ring. If the apparatus is out of order the Disc and Red Light either remain stationary, but not concealed by the shield, or continue to swing after the train has cleared the crossing. Drivers and Guards of trains should still continue to report any irregularity they may notice in the working of this Signal as instructed in the Weekly Notice referred to above.

(A.796/24).

Weekly Notice, No. 31 July 29 1924

THREE POSITION WIG WAG WARNING SIGNALS AT LEVEL CROSSINGS.

8 1. These Signals are provided to warn the public of an approaching train.

2. Whenever a train is approaching in the vicinity of the Level Crossing the Warning Indication will be given by a swinging Red Disc by day and a swinging Red Light by night, and the ringing of a loud sounding gong. As soon as the train clears the crossing the Disc or Light is concealed behind a shield and the Bell ceases to ring. If the apparatus is out of order the Disc and Red Light either remain stationary, but not concealed by the shield, or continue to swing after the train has cleared the crossing.

3. Drivers and Guards of trains should report any irregularity they may notice in the working of these Signals at the first Station where there is a man in charge, and the latter will be responsible for sending information to the Electrical Fitter in charge of the District and also for reporting the matter by memo in the usual manner.

The track force, when in the vicinity of a Level Crossing where these Signals are installed, should, also, as far as practicable, observe the working of the Signals and report any irregularity to the nearest Station-master.

4. Wig Wag Signals are at present in operation at the following Crossings:—

Amess Street, North Fitzroy.
Baxter, Hastings Road, at 32 miles 28 chains (Stony Point Line).
Mornington-Point Nepean Road. (W.N. 31—1924)

Weekly Notice, No. 50 December 9, 1924

NORTH CARLTON

Amess Street Level Crossing—Wig Wag Signal

15 On Monday, the 1st December, the Wig Wag Signal described in Instruction 10 of Weekly Notice 15/24, and Instruction 8 of Weekly Notice 31/24 was replaced by another type showing an out of order indicator which works as shown hereunder:—

Whenever a train is approaching the level crossing, the Warning Indication will be given by a Swinging Red Disc by day and a Swinging Red Light by night, and the ringing of a Loud Sounding Gong.

As soon as the train clears the Crossing the Disc or Light will remain stationary and the bell will cease ringing.

If the Apparatus is defective a banner with the inscription "Out of Order" will drop from behind a shield to a position immediately below the Disc. This "Out of Order" indication will be displayed until the Apparatus is attended to by an Electrical Fitter.

Drivers and Guards of trains should still continue to report any irregularity they may notice in the working of this signal as instructed in Weekly Notice, No. 31/24. A. 2858/24. (W.N. 50—1924.)

DOUBLE-WIRE SIGNALLING, VICTORIAN GOVERNMENT RAILWAYS

Improved mechanisms designed to increase reliability and facilitate maintenance

DOUBLE-WIRE transmissions for points and signals were first introduced on the Victorian Government Railways in 1926, but found little use until 1934, when much experimental work was carried out and further installations brought into service. Several improvements were made in the equipment, and signals are now being operated easily at distances up to 1,500 yd., and points up to 850 yd. Novel and interesting features are included in the new equipment, designed to overcome the disadvantages of that previously used.

With the earlier types of signal mechanism, a clear signal was liable to be improperly displayed in the event of the return wire breaking. The new mechanism was designed to overcome this by the use of a disengaging clutch mechanism illustrated in Fig. 1. The new type of point machine simplified the layout of the equipment and increased the efficiency of operation, maintenance being considerably facilitated; new improved methods of mechanical detection were also adopted, the designs being suitable for both double- and single-wire working and having distinct advantages over the hatchet and slide types now widely used. These improvements, which have been patented, were designed by Mr. F. W. Harvey, Assistant Engineer, Signal & Telegraph Division.

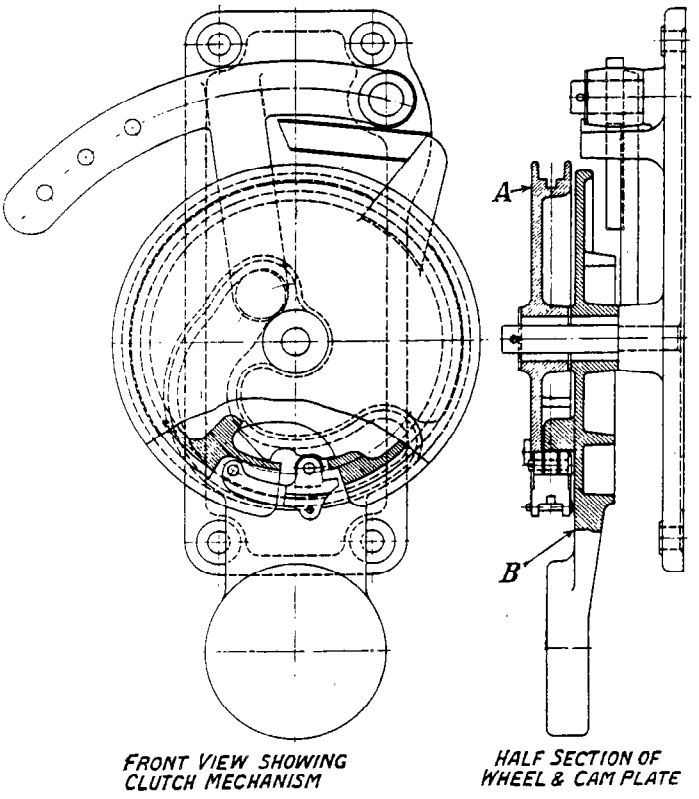

Fig. 1a

Signal Mechanism

The signal mechanism is of the cam plate type and consists essentially of two elements, a grooved pulley wheel *A* (Fig. 1, *a*, *b*, and *c*) and a circular cam plate *B*; these are capable of independent rotation about a common axis *C*, but can be coupled together by a releasable clutch mechanism *D* and *E*. They rotate in unison during normal operation, but are automatically uncoupled should the return wire break. The clutch arm *D*, located in the rim of the pulley *A* and pivoted at *F*, carries a roller *G* engaging under tension with a projection *E* on cam plate *B*.

The pull wire is connected to the clutch arm *D* at *H* and passes round the pulley; *A* and *B* are mounted on base plate *I*, movement being imparted to the signal through the crank *K*, one arm of which is connected to the signal down rod, while the other engages with the cam path on *B*. The crank *K* is also mounted on the base plate. If a wire breakage causes the pulley to rotate, disengagment of the clutch arm *D* with the projection *E* occurs owing to release of tension in the wire. If the signal is at "danger," the cam plate remains normal and maintains it so, but if the signal is at "clear" the balance weight *L* returns it to danger. The clutch arm *D* is kept in training on its pivot by a limited degree of radial movement each time the signal is operated. Roller *G* is normally set out of engagement with the notch *R*, as shown at *M*; the projection *Q* on the wheel holds the cam plate projection *N* against the stop *O* on the base plate. In normal operation idle movement of the pulley occurs until roller *G* engages in notch *R*, but on the signal being returned to danger it lifts out of the notch and assumes its normal setting.

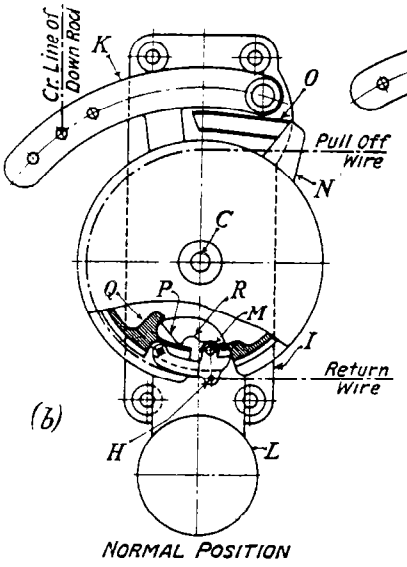

Fig. 1b

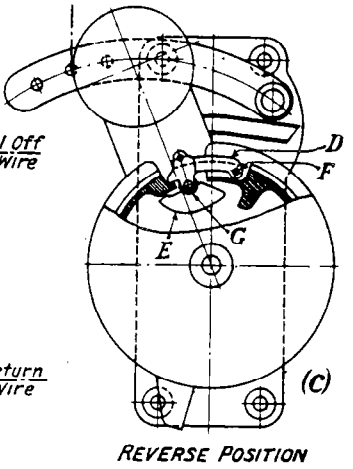

Fig. 1c

In the event of the wheel becoming uncoupled from the cam through any cause other than a broken wire, the clutch is re-engaged by operating the hand lever from reverse to normal when the roller *G* rides over the ramp *P* to assume its normal setting.

The projection *Q* is provided to engage with the projection *E* on the cam plate, and prevent the cam being

held in the reverse position when the wheel is operated to the normal.

Point Mechanism

This was designed to facilitate ready inspection, adjustment and maintenance, and reduce to a minimum the idle travel in the transmission between the withdrawal of the plunger and the movement of the point blades. Simplification of associated mechanisms and connections is also obtained.

Figs. 2*a* and *b* give a plan view with cover removed, and a central transverse section of the motion wheel,

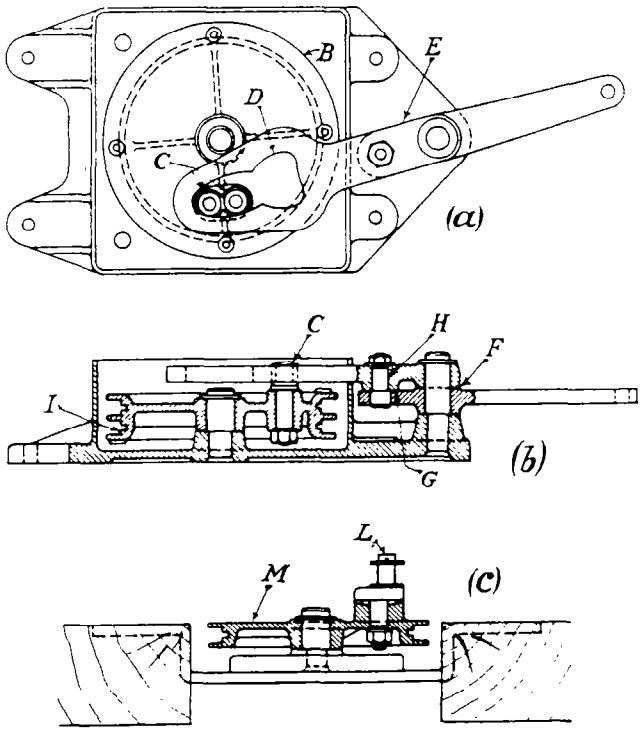

Fig. 2

shown in its central position with operating rollers engaged with the cam. The case is of cast iron, fitted with a sheet steel cover. Motion wheel *B* carries on its upper face a pair of concentrically-aligned rollers *C*, which engage with the cam slot *D* in one end of the crank arm *E*, itself divided as shown at *F*, its two sections being connected at *G* by a shear pin *H* to avoid damage to the mechanism should the points be run through. Inspection and maintenance are readily effected without removing the motion wheel or disturbing the transmission wires. The reduction in idle travel was obtained by using a pair of rollers and suitably shaped cam, instead of the one roller generally used with this type of movement.

Wheel *B* has a double groove in its rim, groove *I* being used when points and lock bar are operated by a single lever, and motion transmitted through a chain to wheel *K* (Figs. 3*a* and *b*), which in turn operates the lock bar and plunger, usually by means of connecting rods and cranks. In an alternative arrangement a motion wheel *M*, Fig. 2*c*, may be used in place of the crank to control and operate the lock bar. Movement of the latter is then effected by chain drive from wheel *K*, its rim having a second groove for the purpose. Adjustment of lock bar travel is provided for by an adjustable eccentric stud *L*.

When a lock bar is operated by a separate lever, the transmission wires are connected directly to wheel *K*.

Mechanical Detectors

To overcome detection difficulties in double-wire transmissions due to temperature variations, new designs of detector have been prepared to suit varying conditions. Type 1 (Fig. 4*a*) consists of two pulley wheels coupled together in the same manner as the pulley and cam plate of the signal mechanism, and mounted vertically on a base through which the detector blades from the points pass transversely. Pulley *A* is similar to pulley *A* of the signal mechanism, but *B* is a grooved wheel, with a detecting snib *C* cast on its inner edge.

Type 2 (Fig. 4*b*) consists of a pulley wheel *G* having two grooves *H*, carrying a detecting snib *A*, capable of adjustment around the wheel for varying clearance *B*. The snib is held in position by plate *C*, which has serrations *D* engaging with others, *E*, on the snib face. Slotted holes *F* allow of circular movement on the wheel.

Type 3 (Fig. 4*c*) is a modification of Type 2, and has a snib solid with the wheel.

Conditions vary according to whether: (*a*) The signal is a long distance outside the points; or (*b*) the signal is close to the points.

In case of (*a*) temperature variations may alter the adjustment of the detector so that the points become locked. This is overcome by dividing the double-wire signal transmission at the points, so that the compensator does not act on the portion between the points and the signal. A dividing wheel similar to Type 1 detector, with the exception that the detecting snib is omitted, is placed close to, and on the lever side of, the detector. Type 3 detector is then used, connected as shown in Fig. 5*a*. Alternatively, the dividing wheel may be combined with the detector as a complete unit. Type 1 detector is so

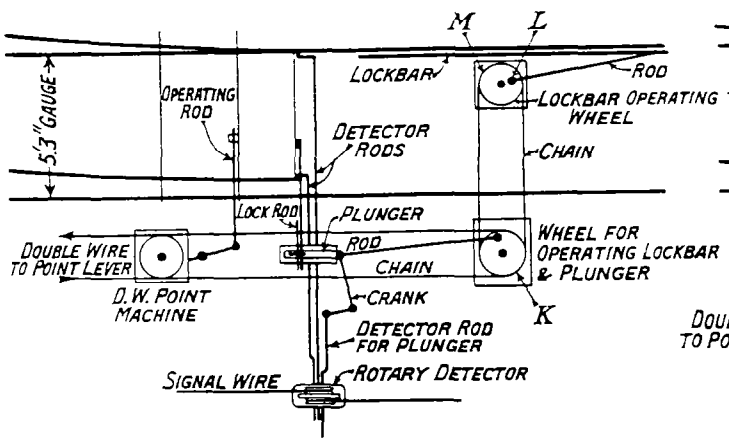

Fig. 3*a*

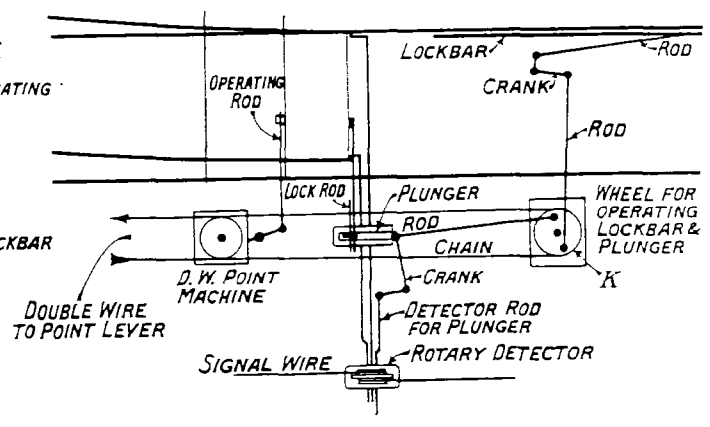

Fig. 3*b*

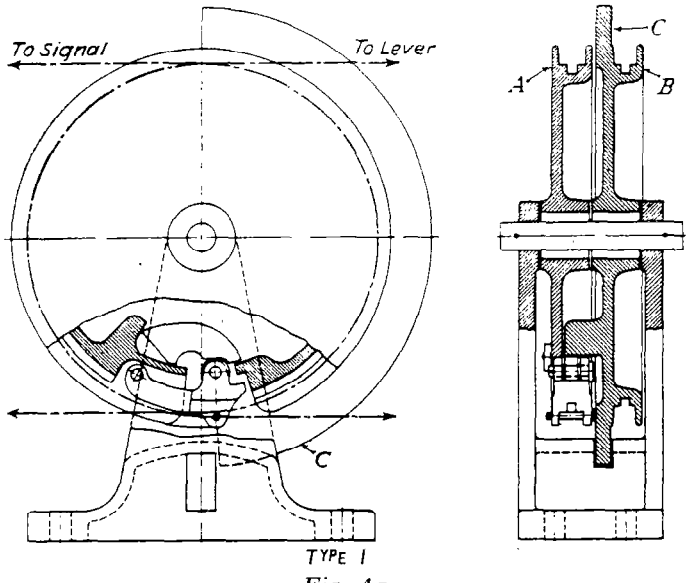

Fig. 4a

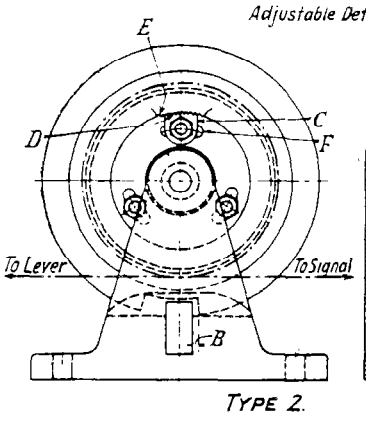

Fig. 4b

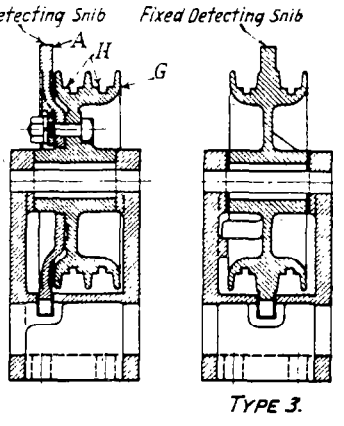

Fig. 4c

designed, and applied as in Fig. 5*b*. The disengaging clutch mechanisms on the dividing wheel and detector are provided to ensure a danger signal being exhibited should a wire breakage occur between the lever and detector, or lever and dividing wheel. Types 2 and 3 are also used when the signal lead is not divided (Fig. 5*c*), while Type 2 can be used, within limits, when the signal is placed some distance outside the points and the lead is undivided. By increasing clearance at *B* some movement may be imparted to the detector without locking the points, its amount being governed by the normal idle travel in the signal mechanism. The clearance will be a maximum at low temperature, but must not be sufficient to permit of the signal being moved if the points are not properly set.

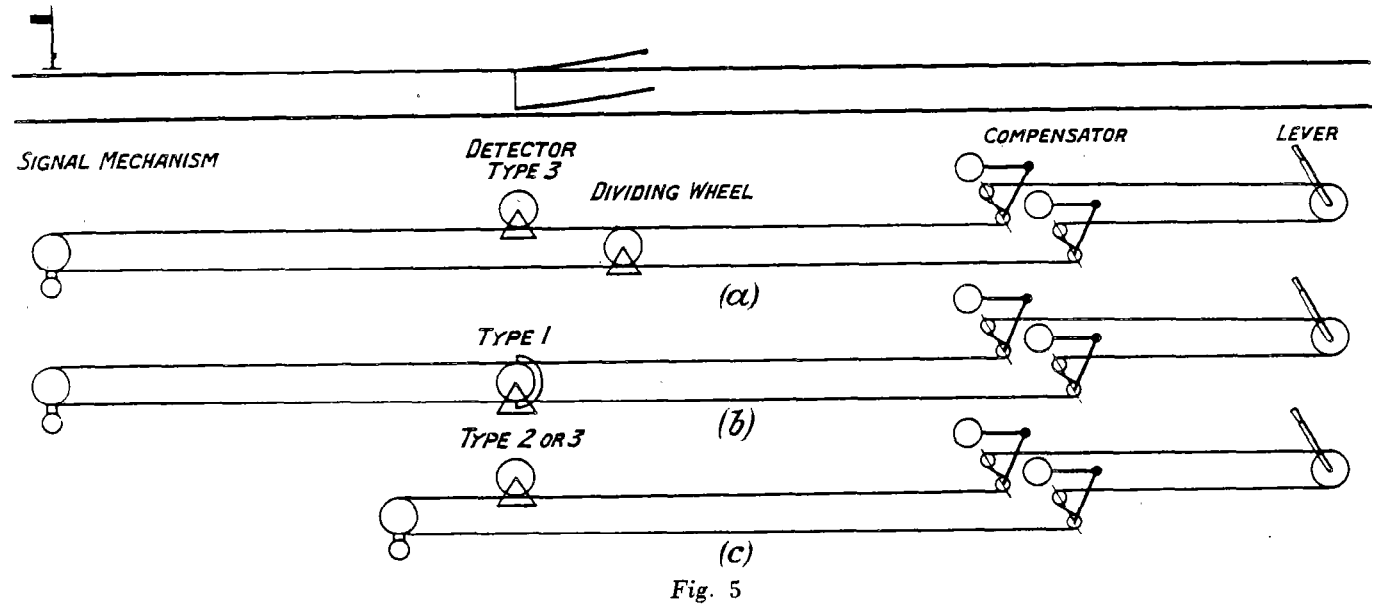

Fig. 5